ZONE TECH

www.zonetech.in

ZONE TECH

Best Institute For Assistant & Junior Engineer

CIVIL ENGINEERING

E-Book

for

(Degree Students)

CE

B.Tech

SURVEY

SSC-JE
STAFF SELECTION COMMISSION-JE

RRB-JE
RAILWAY RECRUITMENT BOARD-JE

State-AE/JE
STATE LEVEL EXAMINATIONS

PSUs
PUBLIC SECTOR EXAMINATIONS

CONTACT US: ZONE TECH
H.O.: M-28, Madhuban Colony, Near Tonk Bridge, Tonk Phatak, Jaipur
B.O.: F-26/A, Behind Pinkcity Honda Showroom, Gatta Stand, Tonk Road, Jaipur
+91-9828747676
+91-9462447676
www.zonetech.in
www.onlinezonetech.in
info@zonetech.in

CHAPTER - 1 (FUNDAMENTAL OF SURVEY)

Surveying is the art of measuring relative position of objects on above or below earth surface by using direct or indirect measurement.

Object of Surveying:-

(1) To plot the relative position of object on plan or map by using measurement on ground.

(2) To set out the object on ground by using data from plan or map.

Principles of Surveying:-

(1) **Working from whole to part:-**

- According to this principle outer network is establish with higher accuracy then after inner network can be established with lesser accuracy.
- This principle prevents the accumulation of error and localize the errors.

(2) To locate a point with reference to atleast two known points (To locate a point by using two measurements)

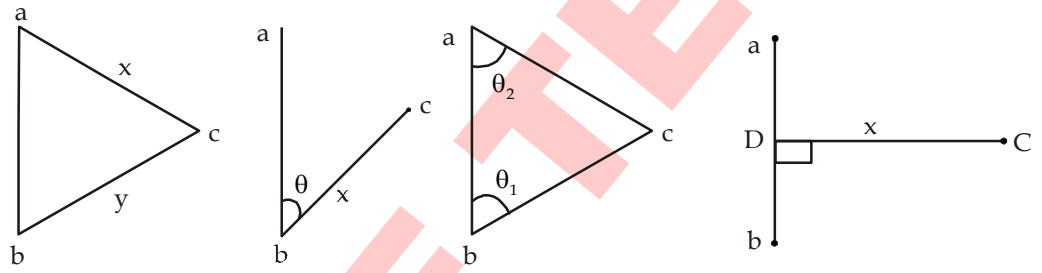

Methods of Surveying:-

(1) Plane Surveying

(2) Geodetic Surveying

(1) **Plane Surveying:-**

- In this method, curvature of earth surface is not considered. (That is earth surface is considered as plane).
- This method is used for small areas.

(2) **Geodetic Surveying:-**

- In this method curvature of earth surface is also considered.
- It is used for large areas.

Note:-

(1) Difference of length along chord and along earth surface between two points is 1 cm for a measurement of 12 km.

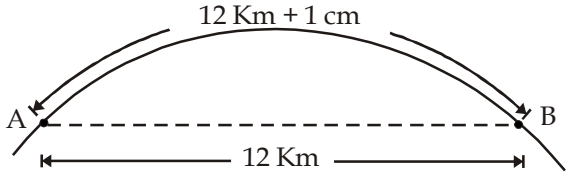

(2) Difference of sum of interior angle of plane triangle and spherical triangle is 1 second for area of triangle is 195 km^2.

ZONE TECH

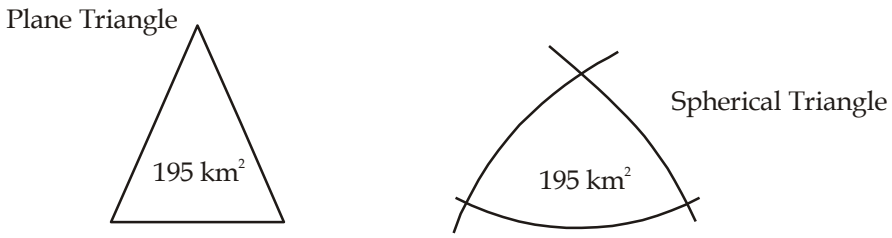

Sum of interior angle = 180° Sum of interior angle = 180°0'1"

(3) Sum of interior angle of spherical triangle is 180°- 540°. (Depends upon area).

(4) Generally plane survey is used when survey area is less than 260 km^2.

Classification of Surveying:-

(I) **On the Basis of Nature of Ground:-**

(a) Land Survey

(b) Hydrological Survey → Survey of water body.

(c) Astronomical Survey → Survey for relative position of stars.

(a) **Land Survey:-**

- Survey on land surface.
- Land survey is further classified as:-

(b) **Topographical Survey:-**

- Survey of topography of area (survey of natural and man made features).
  Ex:- Hill, Rivers.

(c) **Cadastral Survey:-**

- Survey to locate boundary lines of property.
  Ex:- Boundary line of country and state.

(d) **City Survey:-**

- Survey of utilities.
  Ex:- Survey for sewer line, water line etc.

(II) **On the basis of object of Survey:-**

(a) **Engineering Survey:-** Survey for engineering projects.

(b) **Military Survey:-** Survey for defence purpose.

(c) **Mine Survey:-** Survey for mine sites.

(d) **Geological Survey:-** Study of rock, minerals etc.

(e) **Geographical Survey:-** Study of Geography.

(f) **Archaeological Survey:-** Study of past civilization.

(III) **On the basis of Instruments:-**

(a) Chain Survey

(b) Theodolite Survey

(c) Plane Table Survey

(d) Compass Survey etc.

Measurements in Survey:-

(A) **Horizontal Measurement**

(1) **Linear:-** Chain, Tape, Tacheometer, etc.

(2) **Angular:-** Compass, Theodolite, Total station, etc.

(B) **Vertical Measurement**

(1) **Linear:-** Level, Tachcometer, etc.

(2) **Angular:-** Theodolite, Clinometer, Abney's level.

ZONE TECH

Clinometer

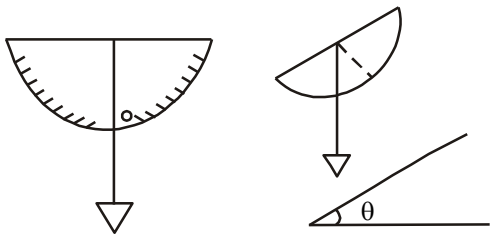

Scale:-

$$\text{Scale} = \frac{\text{Length of line between two points on plan or map}}{\text{Length of line between same points on ground}} = \frac{l}{L}$$

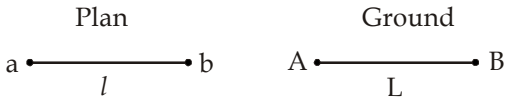

Ex:- 1cm = 10m; $1/1000$

Representative Fraction (R.F.):-

- It is the method of representation of scale in which both distances (on paper or on ground) are represented in same unit.

Ex:- Scale $\Rightarrow$ 1cm = 10m

$$\text{R.F.} = \frac{1\,\text{cm}}{10 \times 100\,\text{cm}} = \frac{1}{1000}$$

(1) Scale having higher value of R.F. is known as larger scale.

Ex:- Scale-1 Scale-2

1cm = 10m 1 m = 10m

$\text{R.F})_1 = \frac{1}{1000}$ $\text{R.F})_2 = \frac{1}{10}$

$\because \text{R.F})_2 > \text{R.F})_1$ $\Rightarrow$ (Scale-2) > (Scale-1)

Difference between Plan and Map:-

Plan	Map
• Horizontal distances are represented in plan. • Plan is used for smaller area. • Larger scale are used in plan.	• Horizontal as well as vertical distances are represented. • It is used for larger area. • Smaller scale are used in map.

Type of Scale:-

(1) Plain Scale
(2) Diagonal Scale
(3) Vernier Scale
(4) Scale on chord

(1) **Plain Scale:-**

- This scale represents relationship between two units.
- This scale is used to measure upto two dimension.

Ex:- cm and mm or foot and inch.

ZONE TECH

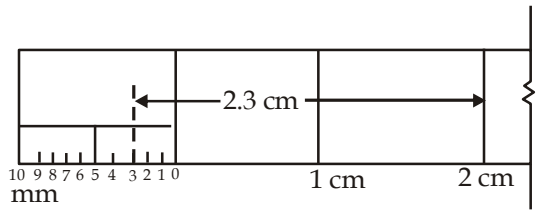

(2) **Diagonal Scale:-**

- This scale represents relationship between three units.
- This scale can be used to measure upto three dimensions.

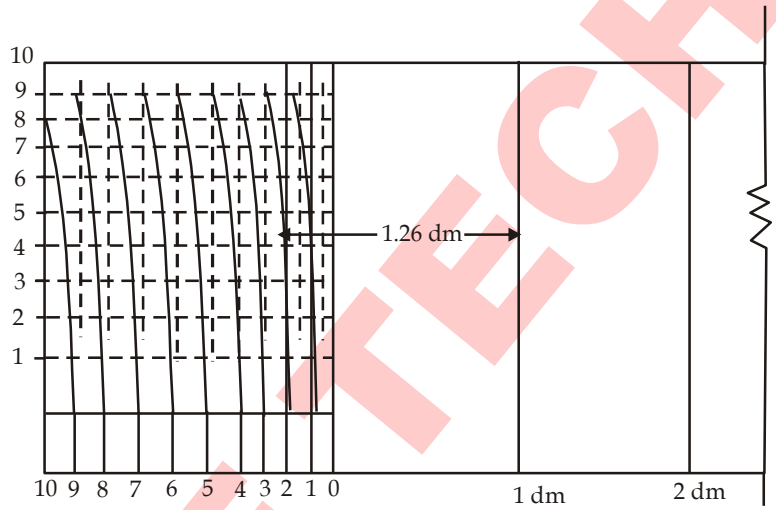

Ex:- 1.26 dm = 1 dm + 2cm + 0.6 cm

(3) **Vernier Scale:-**

- This scale is the combination of two scales. (That is main scale and vernier scale).
- This scale represents relationship between three units.

(a) **Direct Vernier Scale:-**

- In direct vernier main scale and Vernier scale are graduated in same direction.
- In direct vernier n division of vernier scale are equal to n - 1 division of main scale.

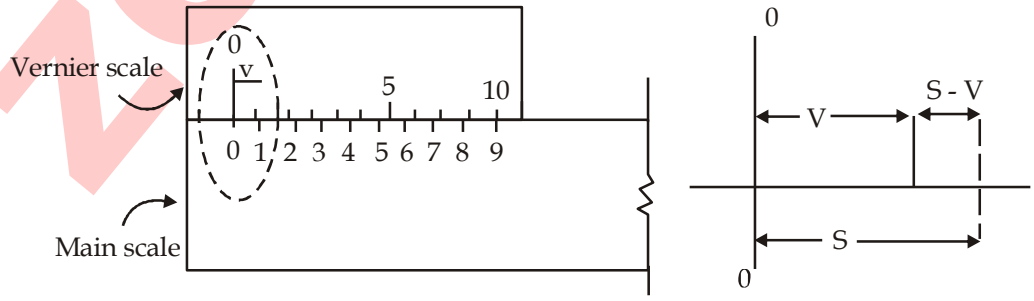

Smallest division of main scale = S
Smallest division of vernier scale = V
For Direct Vernier $\Rightarrow (n \times V) = (n - 1) \times S$
Least count of direct vernier = S - V

$$nV = (n - 1) S \Rightarrow V = S - S/n$$

[L.C. of direct vernier $= S - V = S/n$]

(b) **Retrograde Vernier:-**

- In this vernier main scale and Vernier scale are graduated in opposite direction.
- In this vernier n division of vernier scale are equal to (n + 1) division of main scale.

$$n \times V = (n+1)s$$

$$\text{Least Count} = V - S = \left(\frac{n+1}{n}\right)S - S = S + S/n - S \Rightarrow \left[L.C = S/n\right]$$

(c) **Extended Vernier:-**

- It is similar to direct vernier but in this vernier n division of vernier scale are equal to (2n - 1) division of main scale.

$$n \times V = (2n-1)S$$

$$\text{Least Count} = V - S = \frac{(2n-1)S}{n} - S = 2S - S/n - S = (S - S/n)$$

Double Vernier:-

- If graduation of main scale and vernier scale are in single direction then vernier is known as single vernier
- If graduation of main scale and vernier scale are in both direction then vernier is known as double vernier.

(4) **Scale on Chord:-**

- It is used to measure and setting of angles.

Shrunk Scale:-

Original Scale $= S_o$

Modified/Shrunk scale $(S') = (S.F.) \times$ Original Scale

$$S' = S.F. \times S_o$$

where $S.F = \text{Shrinkage Factor}$

$$S.F. = \frac{\text{Shrunk / Extended distance of reference Line}}{\text{Original distance of reference Line}}$$

Theory of Error

Precision :- Precision is defined as the degree of perfection used in measurement

→ Precision can be improved by using.

(i) Precise instrument

(ii) Proper method

(iii) Skilled labour

Accuracy :- Its defined as the degree of perfection obtained

True Value :- The exact value of any quantity is known as true value of that quantity (Theoretical value)

Discrepency :- The difference of two measured value of same quantity is known as discrepency.

Most-Probable Value (MPV) ;-

→ Measured value of any quantity which has maximum chances to be a true value is known as MPV.

Residual Error :-

→ Difference between measured value and most probable value of any quantity is known as residual error.

Principle of Least Square :-

→ According to this principle most probable value will be that value for which some of square of errors is minimum.

→ If measured value of any quantity are $x_1, x_2, x_3, ...x_n$ if MPV of quantity is $\bar{x}$ then

$$e_1^2 = (x_1 - \bar{x})^2$$

$$e_2^2 = (x_2 - \bar{x})^2$$

$$e_n^2 = (x_2 - \bar{x})^2$$

Sum of square of errors = $Z = (x_1 - \bar{x})^2 + (x_2 - \bar{x})^2 + ... + (x_n - \bar{x})^2$

For minimum value of $Z = \frac{dZ}{d\bar{x}} = 0$

$$\frac{dz}{dx} = 2(x_1 - \bar{x})(-1) + 2(x_2 - \bar{x})(-1) + ... + 2(x_n - \bar{x})(-1) = 0$$

$$(x_1 - \bar{x}) + (x_2 - \bar{x}) + ... + (x_n - \bar{x}) = 0$$

$$(x_1 + x_2 + ... + x_n) - n\bar{x} = 0$$

$$\left[\bar{x} = \frac{x_1 + x_2 + x_3 + ... + x_n}{n}\right] ....$$

Source of Error :-

(1) Instrumental error
(2) Personal error
(3) Natural error

Type of error :-

(1) Mistake error :-

→ Those errors which occurs due to carelessness in experience or confusion in the mind of observer, etc arc known as mistake,

(2) Systematic error :-

→ These error's follow a mathematical or physical law, hence proper correction can be applied for these errors

→ These error's has same magnitude and nature when measurements are done in same condition

→ These error's are cummalative in nature hence also known as cummulative error.

(3) Accidental / Random error :-

→ Those errors which remain after elimination of systematic error and mistake are known as accidental error.

→ These erors does not follow any mathematical or physical law, hence correction cannot' be computed for these errors.

→ These error's are compensative in nature, hence also known as compensating error.

→ These error's follow law of probability

Law of Probability :-

→ According to this law smaller error has higher probability in comparison of larger one.

→ Probability of positive (+ve) or negative (–) having equal magnitude is same

ZONE TECH

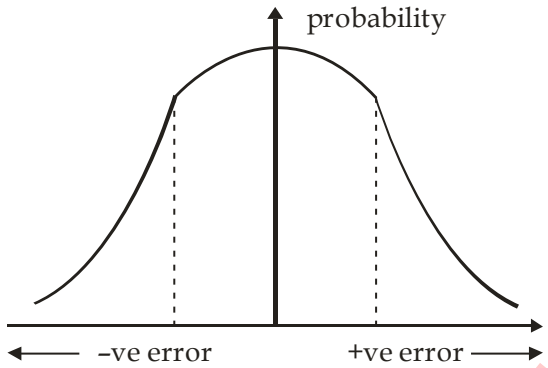

Weight of Measurement :-

→ Weight is a number which is assigned to a measurement which represents the "Precision or Trust worthiness of that measurement.

→ Measurement having higher weight represent lesser error.

Weight Rule :-

(1) If x and y are two measurements having weight w_1 & w_2 respectively and a quantity S is defined such that

$(S = x \pm y)$ then weight of $S = \dfrac{1}{\left(\dfrac{1}{\dfrac{1}{w_1} + \dfrac{1}{w_2}}\right)}$

(2) If x & y are two measurements having wt w_1 & w_2 respectively and S is define such that

S = Avg. of x & y $\dfrac{x+y}{2}$, then $[\text{weight of } s = w_1 + w_2]$

(3) If a measurement x has weight w and s is defined such that

$S = kx$, wt of $S = \dfrac{w}{k^2}$

(4) If x is a measurement having wt w and s is defined such that

$S = x \pm k$ wt of $S = w$

Distribution of Errors :-

Correction $\alpha \dfrac{1}{\text{weight}}$

$\alpha (\text{error})^2$

Most Probable Error :-

→ The value of error which when added or subtracted from most probable value then it represents the range in which true value of quantity may lie, is known as most probable error.

If $x_1, x_2, x_3 .... x_n$ are measured value of quantity having weight $w_1, w_2, w_3 .... w_n$ respectively then most probable value

$$\left[MPV = \bar{x} = \frac{w_1x_1 + w_2x_2 + ... + w_nx_n}{w_1 + w_2 + ...w_n} \right]$$

$V_1 = x_1 - \bar{x}$

$V_2 = x_2 - \bar{x}$

(1) Then probable error in single measurement

$$E_s = \pm 0.6745\sqrt{\frac{\Sigma(wv^2)}{(n-1)}}$$

(2) Probable error in single measurement having weight w.

$$= \pm 0.6745\sqrt{\frac{\Sigma(wv^2)}{w(n-1)}}$$

(3) Probable error in mean value -

$$E_m = \pm 0.6745\sqrt{\frac{\Sigma(wv^2)}{(n-1)\Sigma w}} = \frac{E_s}{\sqrt{\Sigma w}}$$

Maximum Error And Probable Error :-

Δx = max. error in x

Δy = max. error in y

e_x = probable error in x

e_y = probable error in y

(1) $S = x \pm y$

max. error in S = $\Delta S = \pm[\Delta x + \Delta y]$

probable error in S = $e_s = \pm\sqrt{(e_x)^2 + (e_y)^2}$

(2) $S = x.y$

max. eror in S = $\Delta S = \pm[x.\Delta y + y.\Delta x]$

probable error in S = $e_s = \pm S\sqrt{\left(\frac{e_x}{x}\right)^2 + \left(\frac{e_y}{y}\right)^2}$

(3) $S = \frac{x}{y}$

max. eror in S = $\Delta S = \pm\left[\frac{\Delta x}{y} + \frac{x}{y^2}\Delta y\right]$

probable error in S = $e_s = \pm S\sqrt{\left(\frac{e_x}{x}\right)^2 + \left(\frac{e_y}{y}\right)^2}$

ZONE TECH

CHAPTER - 2 (LINEAR MEASUREMENT)

Linear Measurement and Chain Survey

Instruments used:-

(1) Measurement of distances
- Pacing
- Passometer
- Pedometer
- Chain
- Tape

(2) Instrument for setting of angles
- Cross Staff
- Optical Square
- Prism Square

(3) Marking Instruments:-
- Arrow
- Peg

(I) **Chain:-**

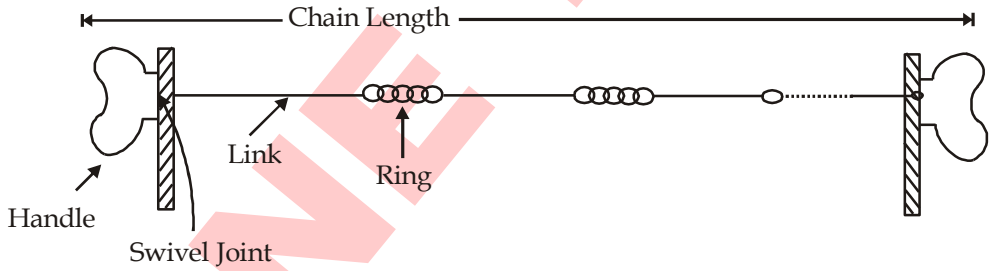

Swivel joint:- It is provided to prevent the twisting of chain.
- Three rings are provided to join two links which provides flexibility at joint.

Types of chain:-

(1) **Metric Chain:-**
- This chain is used when distance is measured in meter.
- This chain is available as:-
  5 m → 25 links → Effective size of link 20 cm
  10 m → 50 links → Effective size of link 20 cm
  20 m → 100 links → Effective size of link 20 cm
  30 m → 150 links → Effective size of link 20 cm
  30 m → 100 links → Effective size of link 30 cm
- To measure the smaller distance (less than 1 chain length) brass tally's as provided at interval of 1 m for 5 m and 10 m chain.
- For 20 m and 30 m chain Brass Ring is provided at interval of 1 m and Tally's are provided at interval of 5 m.

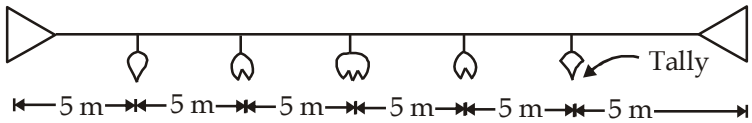

(2) **Engineer's Chain:-**

- This chain has 100 link and total length of chain is 100 feet.
- Tally's are provided at intervals of 10 links.

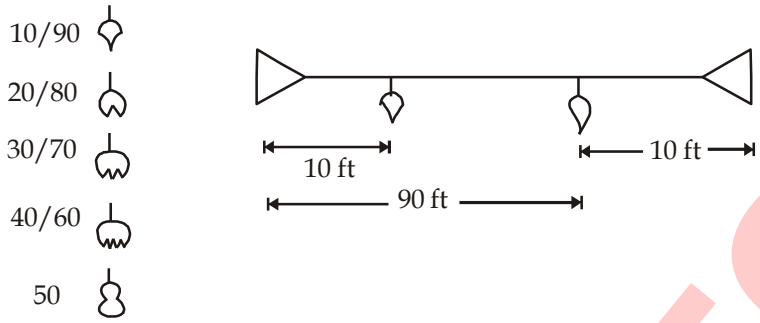

(3) **Gunter's Chain:-**

- This chain is used when distance is measured in miles.
- This chain has 100 link and total length of chain is 66 feet.
- This chain is also known as Surveyor's chain.

$$\left\{\begin{array}{l}10 \text{ Gunter's chain} = 1 \text{ Furlong} \\ 8 \text{ Furlong} = 1 \text{ mile}\end{array}\right\}$$

(4) **Revenue Chain:-**

- This chain has 16 links and total length of chain is 33 ft.
- Engineer's chain and revenue chain are used when measurements are done in ft.

(5) **Steel Band:-**

- This chain is made of a series of steel bands having thickness 0.3 - 0.6 mm and width 12 - 16 mm.

Testing of chain:-

- Testing of chain is done at a temperature of 20°C and Pull of 8 kg.
- Permissible error for chain length is as follows:-

5 m or 10 m → ± 3 mm
20 m → ± 5 mm
30 m → ± 8 mm

Adjustment of chain:-

(1) When length of chain is more:-

- Close the rings which are open.
- Replace the larger ring by smaller one.
- Remove the rings.

(2) When length of chain is less:-

- Straight the links which has been bend.
- Replace the smaller rings by larger one.
- Add the extra ring.
- Clean the rings or links at joint.

ZONE TECH

(II) **Tape**

(1) **Cloth/Linen Tape:-** This tape is made of cloth.

- This tape is affected by moisture variation due to which accuracy is less.
- Generally this tape is used for offset measurement.

(2) **Metallic Tape:-**

- This tape is made of cloth and metallic wire. (Copper or Brass wire)
- This tape is affected by temperature variation.
- This tape is used for offset measurement.

(3) **Steel Tape:-**

- This tape is made of steel.
- Coefficient of thermal expansion of steel is less than copper, hence affect of temperature variation is less for steel tape in comparision of metallic tape.
- This tape is used for accurate measurement.

(4) **Invar Tape:-**

- This tape is made of alloy of steel (64%) and Nickel (36%).
- Accuracy of this tape is more than steel tape.
- This tape is used for precise measurement.
- This tape is generally for measurement of base line used.

(III) **Arrow**

Arrow is used for temporary marking.

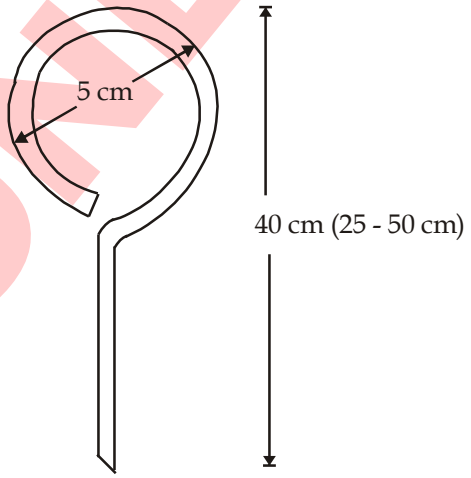

(IV) **Peg**

- Pegs are used for permanent marking.
- Wooden Peg is used in soft ground and metallic Peg is used in hard ground.

ZONE TECH

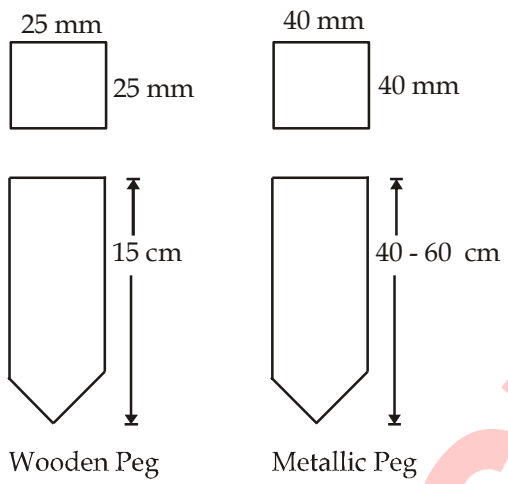

(V) **Plumb-bob**

- It is used to establish a vertical line at any point.
  (A line passing through a point along gravity line is known as vertical line at that point)

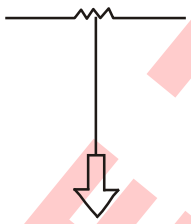

Note:-

- In case of Geodetic Survey vertical line at different points will intersect at each other at center.
- In case of plane survey vertical line at different points will be parallel to each other.

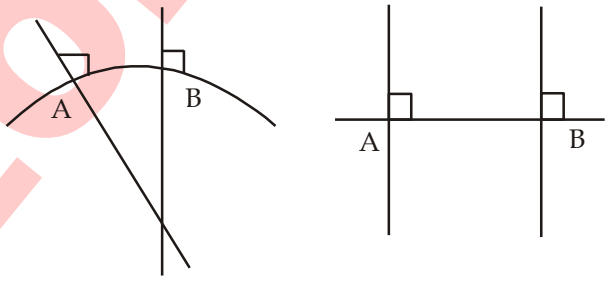

- Plumb bob is also used for centering.
- Vertical line is also known as plumb line.

(VI) **Ranging Rod**

- Ranging rod is used for ranging process.
- Length of ranging rod is 2 - 3 m.
- On ranging rod painting is done on alternate bends with white and black or red colour.
- Size of band is 20 cm.

ZONE TECH

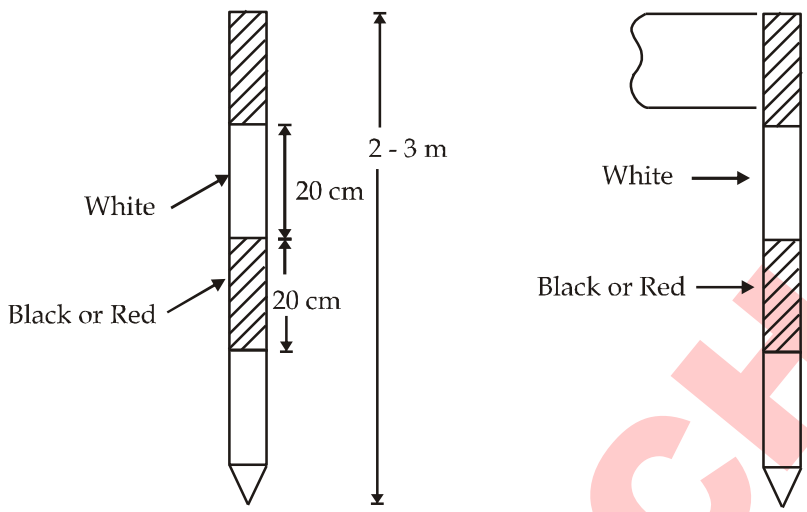

- If the distance between stations is more then to improve the visibility of ranging rod a flag is provided at top of ranging rod.

(VII) **Offset Rod**

- Offset rod is similar to ranging rod having a slight difference that in offset rod thin slits are provided which are used for setting of perpendicular offset.
- A hook is also provided at top of offset rod which is used to pull the chain.

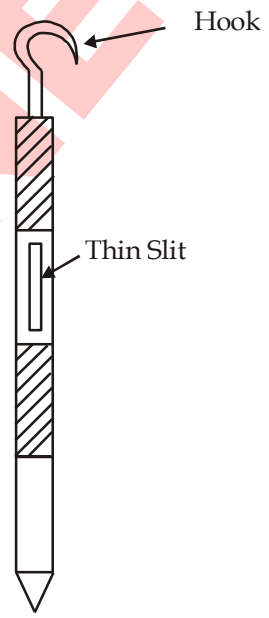

Instrument for setting of Angles:-

(1) Cross Staff → Setting out Right angles.
(2) Optical Square
(3) Prism Square

ZONE TECH

(1) **Cross Staff:-**

(a) **Simple Cross Staff:-**

- It is used for setting of 90° angle.

(b) **French Cross Staff:-**

- It is used for setting of 90° and 45° angle.

(c) **Adjustable Cross Staff:-**

- It can be used for setting of any angle.

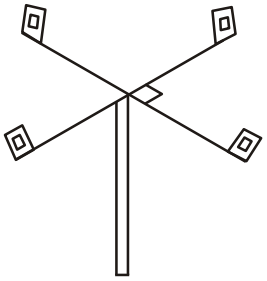

Simple Cross Staff

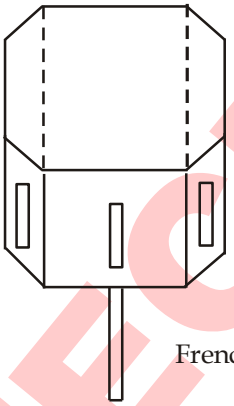

French Cross Staff

(2) **Prism Square:-**

- It is used for setting of 90° angle.

(3) **Optical Square:-**

- It is used for setting of 90° angle.
- Optical Square has two mirrors which has 45° angle in between them.

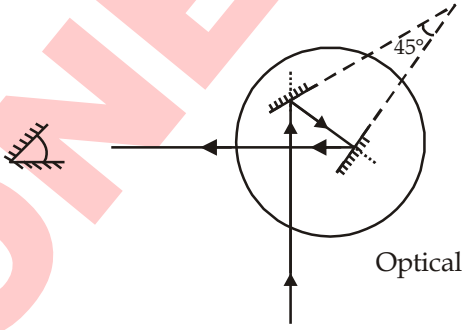

Optical Square

Note:- Some instruments and their use:-

Tellurometer
Geodimeter → Type of EDM (Electronic Distance Measurement)
Distomat

Clinometer
Abney's Level → Angle Measurement

Planimeter → Area Measurement
Pantagraph → To enlarge map/plan
Line Ranger → Ranging
Gradiometer → Setting of Grade

ZONE TECH

(I) Chain Surveying

- It is the simplest method of surveying in which linear measurements are done with the help of chain or tape.
- It is used for small area.

Principle of Chain Surveying:-

- Basic Principle of chain surveying is triangulation in which survey area is divided into a network of well-condition triangles.
  (Well condition triangles are those triangle which have all angles between 30° - 120°)

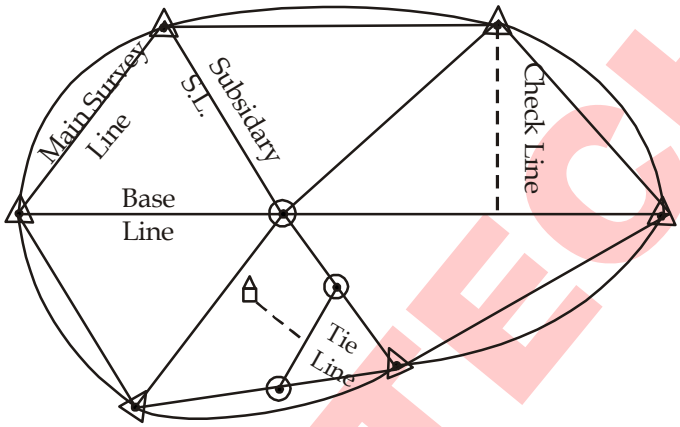

Main Survey Station:-

- Those stations which are establish along the boundary of survey area are known as main survey station.
- Survey lines which join the main survey stations are known as main survey line.

Base Line:-

- Longest main survey line which divides the survey area in almost two equal parts is known as base line.
- All triangles of network are constructed on base line.
- Base line is most important survey line hence measurement of base line should be done with higher accuracy.
- Generally measurement of base line is done with the help of "invar tape."

Tie Line:-

- Subsidary survey line which is used to reduce the length of offset is known as tie line.

Check Line:-

- Those survey line which are used to check the accuracy of survey are known as check line.
- It is also known as "Proof Line".
- Tie line can be used as check line.

Operations in Chain Survey:-

Reconnaissance (Rough Survey)
Fixing of Station
Ranging
Chaining (measurement of survey line)
Detailing

ZONE TECH

Ranging

The process of establishment of intermediate points along a straight line between two stations is known as ranging.

(1) **Direct ranging:-**

Direct ranging is used when both stations are visible from each other.

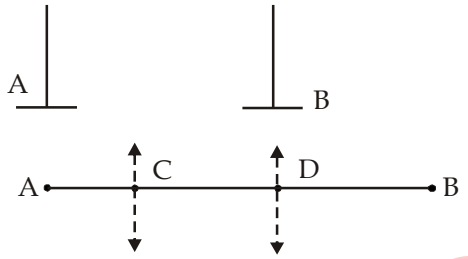

(2) **Indirect/Reciprocal Ranging:-**

- Reciprocal ranging are used when both stations are not visible from each other but both stations are visible from two intermediate points.

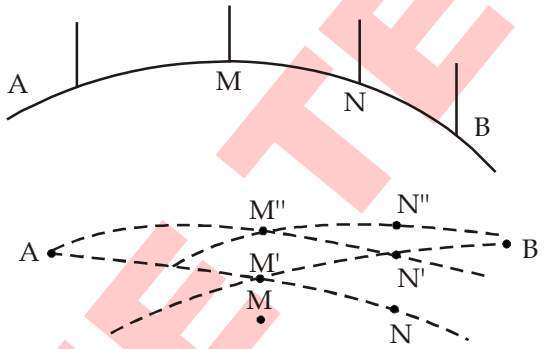

Note:-

- Minimum number of ranging rod required for direct ranging is three and four for indirect ranging.
- If stations are not visible each other and both stations are not visible from intermediate point on straight line (Straight line joining both stations) then Random line method is used.

Chaining

- In chaining process two persons are required (that is follower and leader)

  Zero End of chain → Follower

  Final End of chain → Leader
- In chaining process leader marks the arrow at the end point of chain which are collected by follower.
- Follower should have more experience in survey than leader.

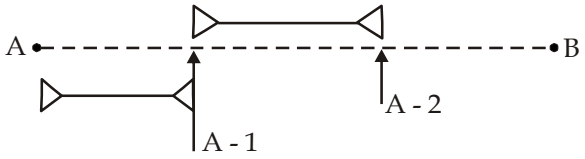

Chaining on Sloping Ground:-

Direct/Stepping Method:-

ZONE TECH

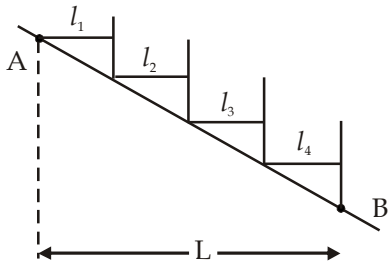

Total Horizontal distance between A and B $= L = l_1 + l_2 + l_3 + l_4$

Indirect Method:-

Method 1:-

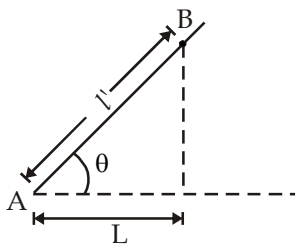

Horizontal distance between A and B $= L = l' \cos\theta$

Method 2:- Hypotenusal Allowance Method:-

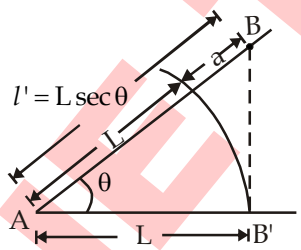

Hypotenusal Allowance for horizontal distance 'L' and slope angle 'θ'-

$$a = L(\sec\theta - 1)$$

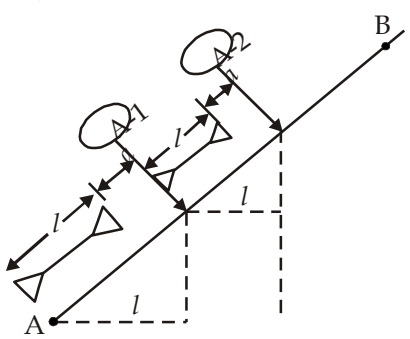

Hypotenusal Allowance for chain length 'l' and angle θ -

$$a = l(\sec\theta - 1)$$

In this method measurement is done along sloping surface but the arrow is mark at a additional distance 'a' [a = Hypotenusal allowance] from end point of chain and it is considered that the major distance (l + a) is equal to one chain length (l).

i.e. it represents that (l + a) distance along the slope is equivalent to l distance in horizontal.

ZONE TECH

Offset

The lateral distance measured from a surveyline is known as offset. If offset is at 90° angle which survey line then it is known as perpendicular offset otherwise it known as oblique offset.

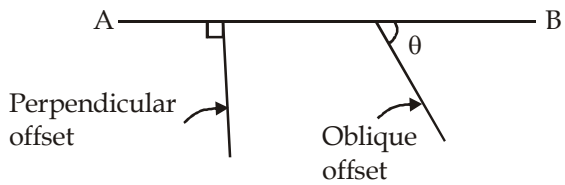

Method for setting of perpendicular offset with the help of chain or tape :-

3–4–5 Method

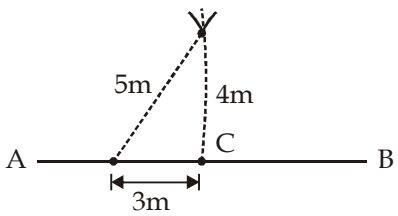

3-4-5 method

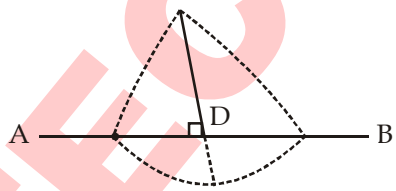

Swinging method

Corrections in Chain Survey :-

(1) Correction due to incorrect length.
(2) Correction for slope.
(3) Correction due to incorrect alignment.
(4) Correction for temperature
(5) Correction for Pull
(6) Correction due to Sag
(7) Correction for MSL (Mean Sea level)

(1) Correction due to Incorrect Length :-

→ If the length of chain or tape during measurement is not equal to the standard length of chain or tape then measured distance will be incorrect. Hence correction is required to calculate the true or actual value of measured distance.

L = Designated length of chain/tape

L' = Length of chain / tape during measurement

ℓ = True / actual value of measured distance

ℓ' = measured distance

$$(L \times \ell = L' \times \ell') \Rightarrow \left(\ell = \frac{L' \times \ell'}{L}\right)$$

If

L' > L → Correction (+ve)

L' < L → Correction (–ve)

ZONE TECH

(2) Correction for Slope :-

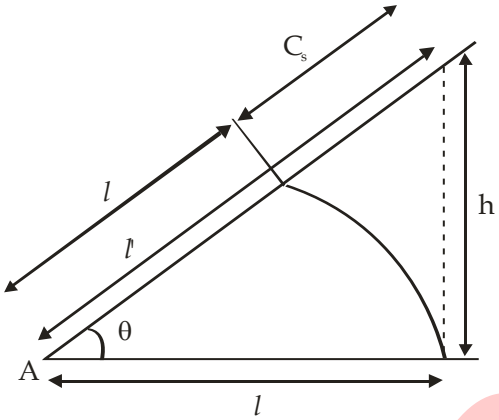

ℓ' = Measured Distance along slope
ℓ = Horizontal distance
C_s = Correction for slope
$C_s = \ell' - \ell = \ell' - \ell' \cos\theta$
$C_s = \ell'(1 - \cos\theta)$

Slope Correction is always Negative
Approximate formula for slope correction -

$$\left[C_s = \frac{h^2}{2\ell'}\right]$$

Where -
h = Vertical distance between points
ℓ' = Distance measured along slope.

(3) Correction For incorrect Aligment :- "Always Negative"

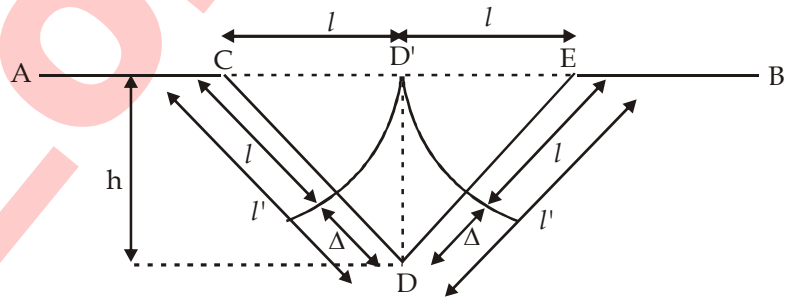

$2\ell = 2\ell' - 2\Delta$
$(\ell = \ell' - \Delta)$

where $\Delta = \frac{h^2}{2\ell'}$

(4) Correction for Temperature :-
T_0 = Standard Temperature
T_m = Temp during measurement

α = Coeff. of thermal expansion
L = Designated length of tape
L' = Length of tape during measurement
ℓ' = measured distance
Then correction due to temperature -

$$\left[C_T = \ell'\alpha\left(T_m - T_0\right)\right]$$

If
$T_m > T_0 \rightarrow L' > L \Rightarrow$ Correction (+ve)
$T_m < T_0 \rightarrow L' < L \Rightarrow$ Correction (–ve)

(5) Correction for pull :-

P_0 = Standard pull
P_m = Pull during measurement
A = C/S area of tape
E = Young's modulus
L = Designated length of tape
L' = Length of tape during measurement
ℓ' = Measured distance
Then Correctin due to pule -

$$\left[C_p = \frac{\left(P_m - P_0\right)\ell'}{AE}\right]$$

If
$P_m > P_0 \rightarrow L' > L \rightarrow$ Correction (+ve)
$P_m < P_0 \rightarrow L' < L \rightarrow$ Correction (–ve)

(6) Correction due to Sag :-

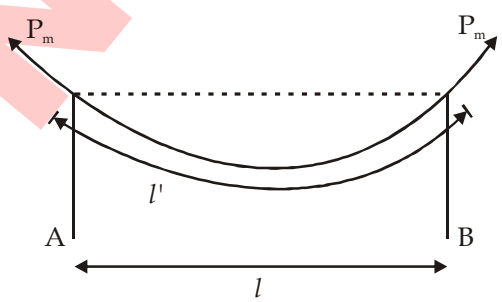

→ When a tape is supported between two suppots then sagging take place due to self w.t of tape. Hence sag correction is applied to calculate the actual or true value of measured distance.

$$C_{sag} = \frac{W^2\ell'}{24\left(P_m\right)^2} = \frac{w^2\ell'^3}{24\left(P_m\right)^2}$$

Where
P_m = Pull during measurement
ℓ' = Measured distance
W = Total wt. of tape
w = wt. of tape per unit length

→ This correction is always "Neagtive in Nature"

Note :- Normal Tension / Pull :-

When +ve pull correction and –ve sag correction becomes equal in magnitude the pull applied on tape is known as normal tension or normal pull.

$C_{sag} = C_{pull}$

$$\frac{W^2 \ell'}{24(P_m)^2} = \frac{(P_m - P_0)\ell'}{AE} \Rightarrow P_m = \text{Normal Tension}$$

(7) Correction For Mean Sea Level (MSL)

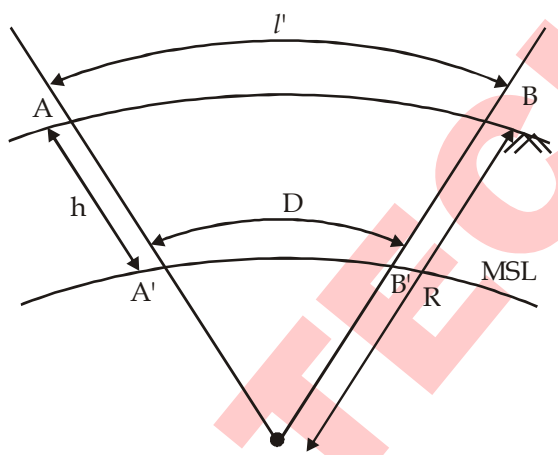

$(D = \ell' - C_{MSL})$

$$C_{MSL} = \frac{l'h}{R}$$

Where :-

R = Radius of earth

Limiting Length of offset :-

Case - I :- When error is in laying direction only

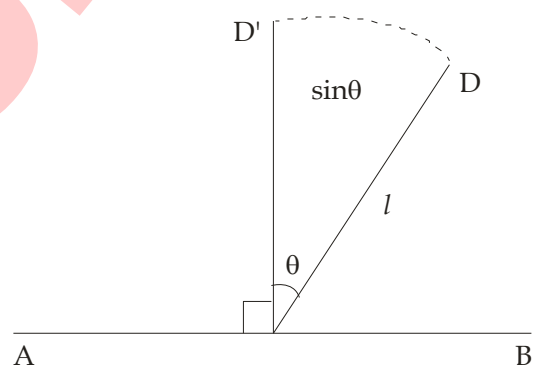

If permisible error on plan / Map = 0.25 mm

$$\frac{\ell \sin\theta}{S} \le 0.025\text{cm}$$

$$\left[\ell \le \left(\frac{0.025}{\sin\theta} S\right)\right]$$

error on ground = $DD' \approx \ell\theta \approx \ell \sin\theta$

If scale of plan / map is 1cm = S m

then error on plan = $\frac{DD'}{S}$

$\Rightarrow \frac{\ell\sin\theta}{S}$ cm

Case - II :- When error is in laying direction & linear measurement both

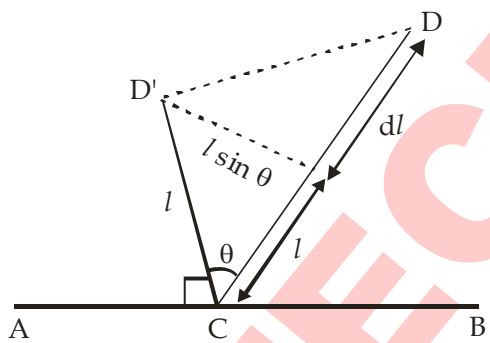

Error on ground = DD'

$DD' = \sqrt{(d\ell)^2 + (\ell\sin\theta)^2}$

If scale of plan/map is 1cm = S m

then error on plan/ map = $\frac{DD'}{S} = \frac{\sqrt{(l\sin\theta)^2 + (d\ell)^2}}{S}$ cm

If permissible error on plan = 0.25mm = 0.025 cm

then -

$$\frac{\sqrt{(\ell\sin\theta)^2 + (d\ell)^2}}{S} \le 0.025$$

$$(\ell\sin\theta)^2 \le [(0.025)S]^2 - (d\ell)^2$$

$$\ell \le \frac{\sqrt{[(0.025)S]^2 - (d\ell)^2}}{\sin\theta}$$

ZONE TECH

CHAPTER - 3 (COMPASS SURVEY)

Angularl Measurement Compass Survey

→ It's the survey in which the network of survey line is stablished by angular measurement (with the help of compass) and linear measurement (with the help of chain or tape).

→ In compass survey direction of any survey line is represented with respect to a reference line, this reference line is known as meridian and angle of survey line with meridian is known as bearing of that survey line.

Types of Meridian :-

(1) True meridian → Its not a time dependent meridian (constant)
(2) Magnetic meridian → Time dependent
(3) Grid meridian
(4) Arbitrary meridian

(1) True Meridian :-

→ A line along the earth surface which passes through true north (TN), True south (TS) and given point (P) is known as true meridian at that point.

→ Angle of any survey line with respect to true meridian is known as true bearing of that survey line.

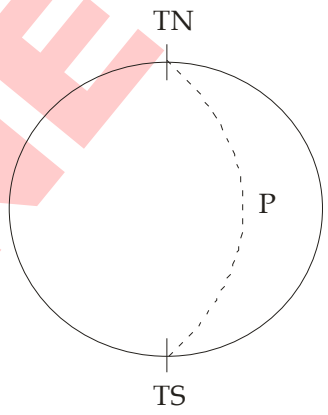

(2) Magnetic Meridian :-

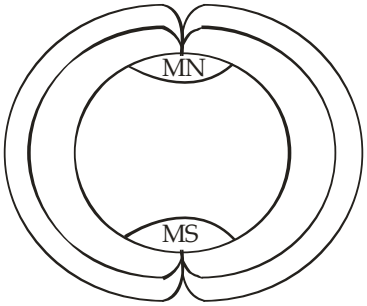

ZONE TECH

→ A line always magnetic flux line which passes through magnetic north (MN), magnetic south (MS) and given point is known as magnetic meridian as that point.

→ Angle of any survey line with respect to magnetic meridian is known as magnetic bearing of that survey line

(3) Grid Meridian :-

→ For survey of a large area true meridian is determined at one main survey station and at other survey stations true merdian is considered parallel to the true meridian at that main survey station. Such type of meridian is known as grid meridian.

→ Angle of any survey line with grid meridian is known as grid bearing.

(4) Arbitrary Meridian :-

→ If reference line is considered at a point in arbitrary direction, then this reference line is known as arbitrary meridian.

→ Angle of any survey line with arbitrary meridian is known as arbitrary bearing.

Bearing Systems

(1) WCB (Whole circle bearing) system

(2) Reduced /quadrants bearing system

(1) WCB System :-

→ If bearing is measured from north in clock wise direction then its known as WCB.

→ Range of WCB → 0° – 360°

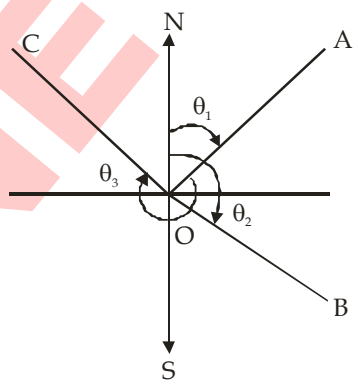

WCB of line OA = θ_1
WCB of line OB = θ_2
WCB of line OC = θ_3

(2) Quadrants Bearing :-

→ If bearing is measured from north or south (which ever is nearer) in clock wise or anti clock wise direction its known as quadratic bearing.

RB of line OA = $N\theta_1E$
RB of line OB = $S\theta_2E$
RB of line OC = $N\theta_3W$

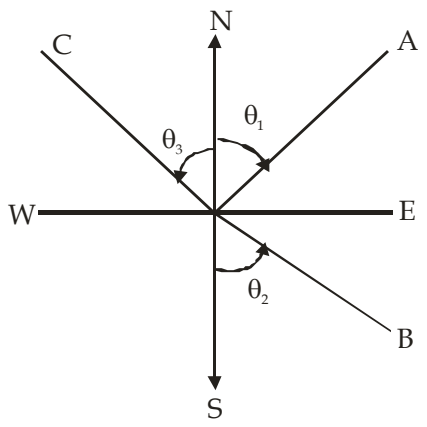

→ Range of RB = 0° – 90°

Note :-

WCB	RB
0°	N/Due North
180°	S/Due South
90°	E90°/Due east
270°	W90°/Due west

Note :-

WCB	RB
160°	S20°E
310°	N50°W
40°	N40°E
130°	S50°E

Fore Bearing :-

→ Bearing of any survey line which is measured in the direction of traverse is known as fore bearings.

Back Bearng :-

→ Bearing of any survey line which is measured in opposite direction of traverse is known as back bearing

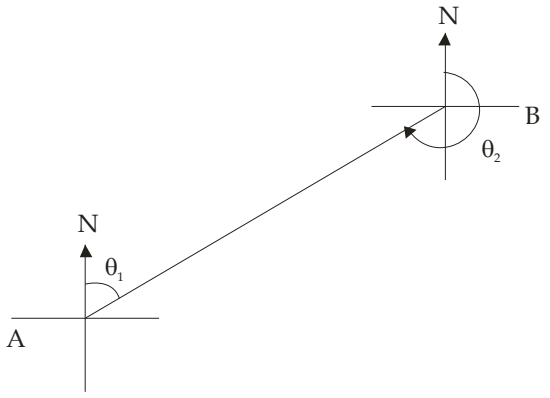

ZONE TECH

FB of line AB = θ_1
BB of line AB = θ_2
FB of line BA = θ_2
BB of line BA = θ_1

Note :-

Difference of fore bearing and back bearings of any survey line is 180°

$$\boxed{BB = FB \pm 180°}$$

Note :-

Sum of interior angle ⇒ (2n – 4) × 90°
Sum of exterior angle ⇒ (2n + 4) × 90°
Sum of deflection angle ⇒ 360°
Figure

Included Angle :-

→ Angle of any survey line with respect to its previous survey line in clockwise direction is known as included angle.
→ Included angle may be interior or exterior angle.
→ Sum of included angles → $(2n \pm 4) \times 90°$

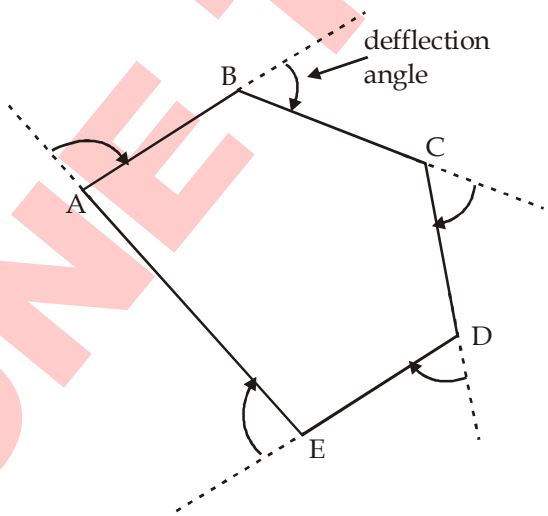

ZONE TECH

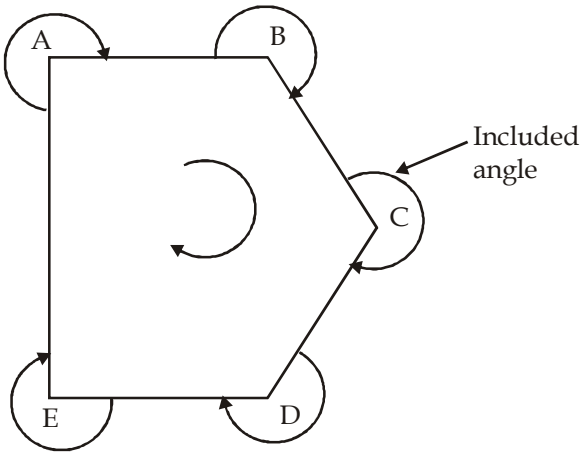

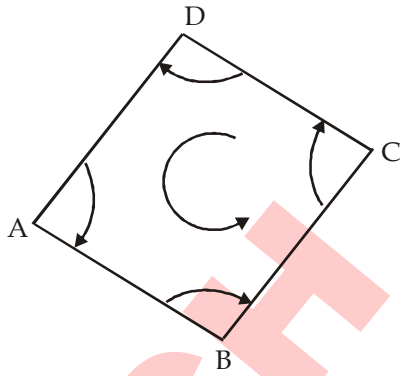

Angle of dip :-

→ Vertical angle between horizontal and magnetic flux line at any point is known as angle of dip.

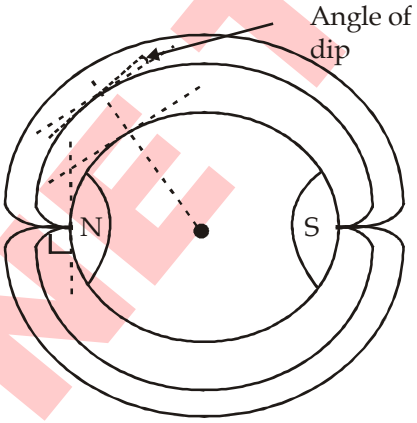

→ Angle of dip at equator ⇒ 0°
→ Angle of dip at poles ⇒ 90°
→ A line which join the points having equal angle of dip is known as Isoclinic line.
→ Isoclinic line which join the points having zero angle of dip is known as Aclinic line.

Magnetic Declination :-

→ The horizontal angle between true meridian and magnetic meridian at any point is known as magnetic delination at that point.
→ If magnetic meridian is on eastern side of true meridian then its known as eastern or positive declination
→ If magnetic meridian is on western side of true meridian, then its known as western or negative declination

ZONE TECH

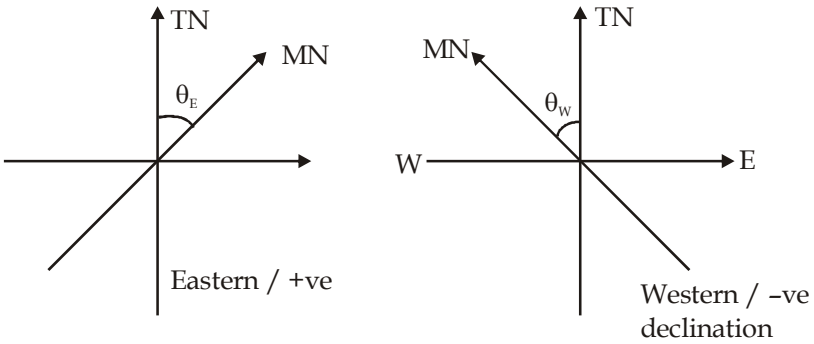

Relationship between true bearing and magnetic bearing

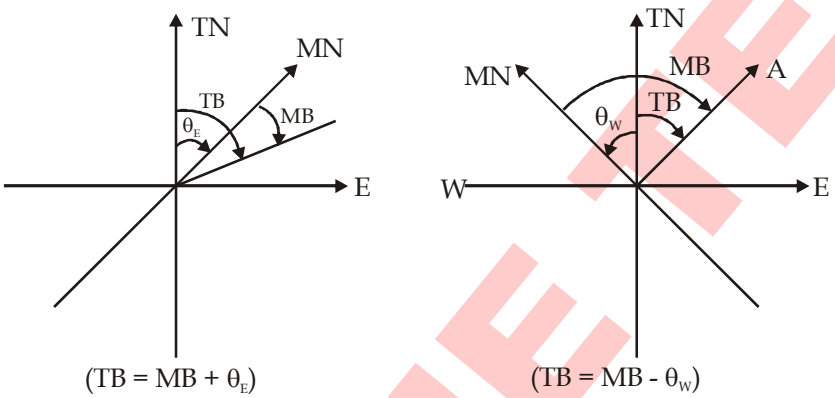

Variation of Magnetic Declination :-

(1) Diurnal variation → one day variation

(2) Annual variation → one year variation

(3) Secular variation → long time variation

(4) Irregular variation → Due to environmental condition variation

Diurnal Variation :-

→ Variation of magnetic declination in one day.

→ Diurnal variation is more in summer in comparison of winter.

→ Its more in day in comparision of night

→ Its more at poles in comparision of equator.

Note :-

A line which join the points of equal magnetic declination is known as "Isogonic Line"

→ Isogonic line which join the points of zero magnetic declination is known as "Agonic Line"

ZONE TECH

Component of Compass :-

(1) Magnetic Needle
(i) Broad Type (ii) Edge Type
(2) Graduation circle
(3) Sight vanes
(4) Compass box.

Type of Compass :-

(1) Prismatic Compass
(2) Sureyor Compass

Prismatic Compass

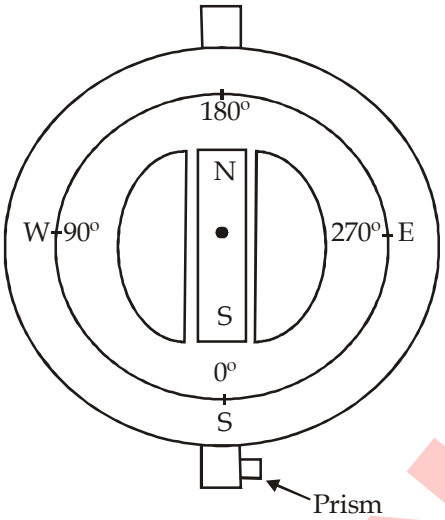

Surveyor Compass

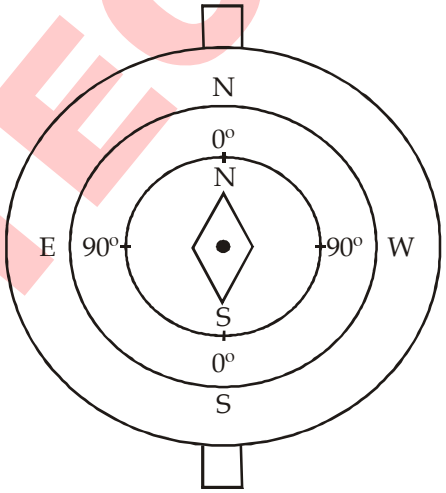

Prismatic Compass	Surveyor Compass
→ Needle is broad type needle	→ Needle is edge bar type needle
→ Graduation circle is attached with needle box	→ Graduation circle is attached with compass
→ It represents bearing in WCB	→ It represents bearings in RB/QB
→ marking S = 0°, N = 180°	→ Marking S = 0°, N = 0°
→ Reading is taken with the help of prism	→ Reading is taken directly
→ Marking on graduation circle is inverted	→ Marking on graduation circle is straight
→ Sighting and reading both process are simultaneous simultaneous	→ Sighting and reading are not
→ It can be used without tripod.	→ Tripod is necessary

Temporary Adjustment of Compass :-

(i) Centering (ii) Leveling (iii) Sighting

ZONE TECH

Note :-

To attach the needle with pivot Jewel bearing is used.

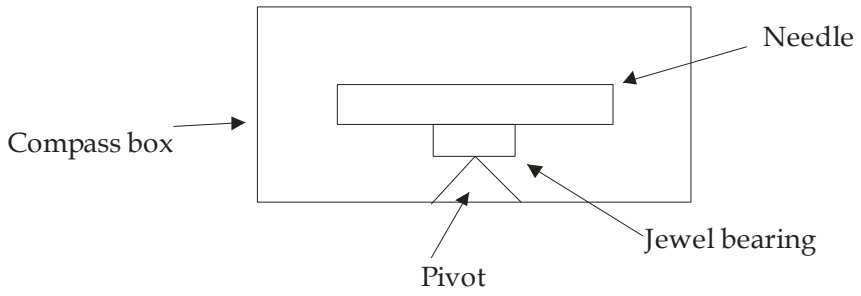

Local Attraction :-

→ If magnetic needle at any point (station) is affected by any local object (magnetic field other than earth magnetic field) than its known as local attraction.

→ Error in magnetic bearing of survey lines due to local attraction will be equal for all survey lines for which bearing is measured from same station.

→ Due to local attraction error in angle measured at survey station (which is affected by local attraction) will be zero

→ If difference of BB and FB of any survey line is 180° than there may be two possibilites
(a) Both stations are free from local attraction.
(b) Both stations have same value of local attraction.

→ If direction of FB/BB of any survey line is not 180° than one or both station are affected by local attraction.

Calculation of Corrected Bearing :-

Case - I : Without using interior angles :-

→ This method can be used only when error in sum of interior angle is zero. (that is if sum of interior angle has any error, then this method will not give accurate bearings.)

Case - II :-

Calculation of corrected bearing by using corrected value of interior angles.

ZONE TECH

CHAPTER - 4 (TRAVERSE SURVEY)

Traverse Survey

→ Traverse survey is the survey which consists a series of connected survey lines which construct close or open network.

→ Survey lines of traverse are known as "Traverse leg"

Types of Traverse :-

Open Traverse -

→ A traverse which starts from a known or unknown point but terminate at unknown point. (intially unknown location) is known as open traverse.

Close Traverse -

→ A traverse which start and terminate at known locations (initially known location) is known as close traverse.

→ If starting ad terminating point of close traverse coinside then its known as close loop taverse. If starting and terminating point of close traverse does not coinside then its known as open loop close traverse / close link traverse.

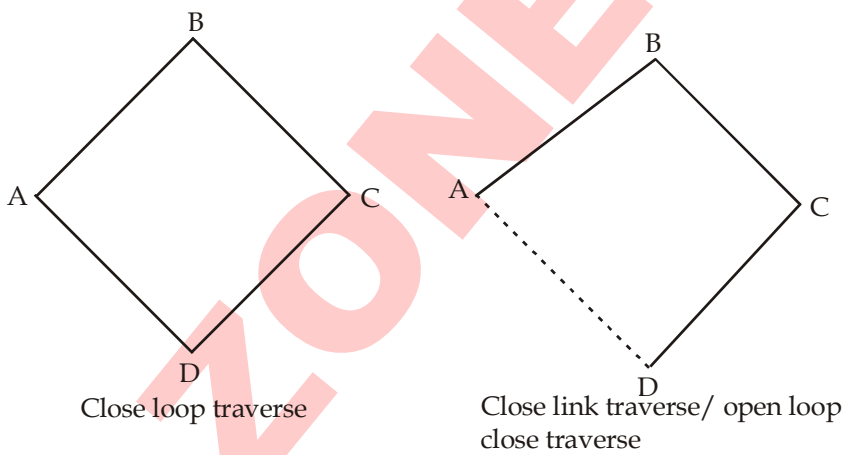

Types of Traverse Based on Instrument Used :-

(1) Chain traverse

(2) Chain and compass traverse / loose needle method

(3) Theodolite Traverse / Fast needle method

(4) Plain table traverse

(1) Loose Needle Method :-

→ In this method bearing of survey line is measured by using magnetic meridian at every station.

ZONE TECH

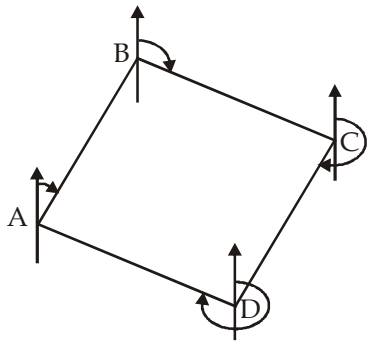

(2) Fast Needle MTD :-

→ In this method bearing of survey line at starting station is measured with the help of "Trough Compass ad Theodolite" and at all other survey stations bearing of survey lines is calculated by using interior or exterior or deflection angle.

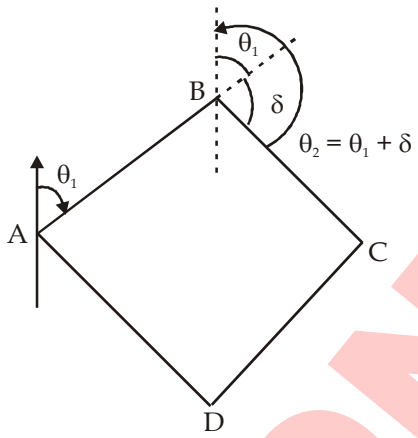

Latitude and Departure :-

→ Projection of any survey line on north - south axis is known as latitude.

→ If projection is towards north side, than its known as positive latitude or northing.

→ If projection is towards south side, then its known as negative latitude or southing

Departure :-

→ Projection of any survey line on E-W axis, then it is known as departure.

→ If projection is on east side, then its known as positive departure or earthing.

→ If projection is on west side then its known as negative departure or westing.

ZONE TECH

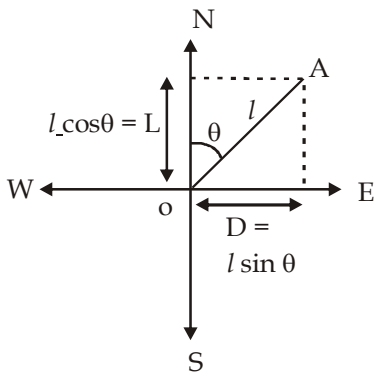

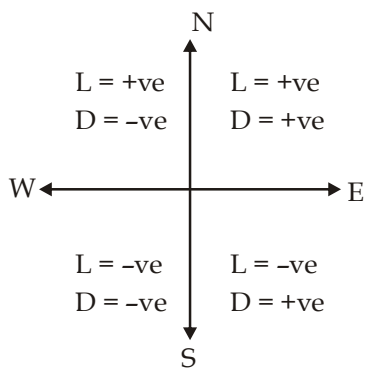

l = length of survey line
θ = bearing of survey line (in WCB)

Co-ordinate System

Consecutive / Dependent Co-ordinate :-

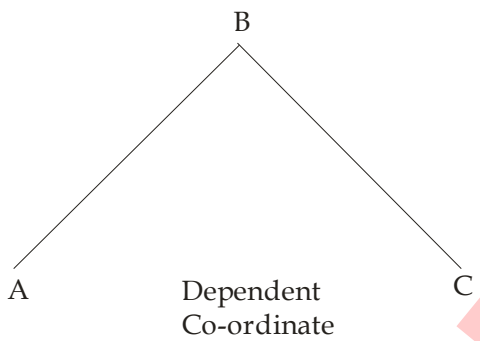

→ If co-ordinate of any surrey station is calculate with respect to its previous station than these co-ordinates are known as dependent co-ordinate

Total Co-ordinate / Independent :-

→ If co-ordinates of all survey stations are calculated with respect to a common reference point than these co-ordinates are known as total co-ordinate.

Note :-

For a close loop traverse,
Algebric sum of latitude = ∑L = 0
Algebric sum of departure = ∑D = 0

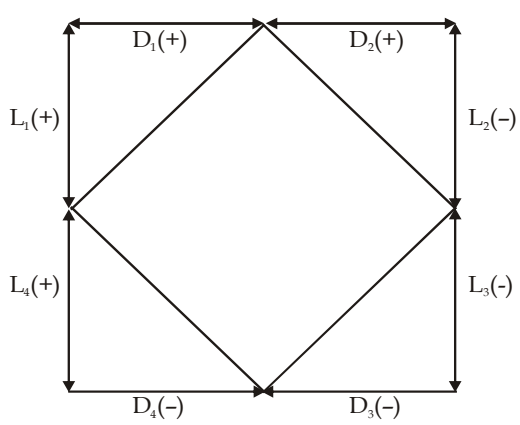

ZONE TECH

$\sum L = L_1 - L_2 - L_3 + L_4$
$= (L_1 + L_4) - (L_2 + L_3)$
$\sum L = 0$

Adjustment of Traverse :-

(1) Bowditch method
(2) Transit method
(3) Graphical method
(4) Axis method

(1) Bowditch MTD :- Also known as "Compass Method"

→ This method is also used when accuracy of linear measurement and angular measuremet is same.

(i) Error in linear measurement $\propto \sqrt{\ell}$

(ii) Error in angular measurement $\propto \frac{1}{\sqrt{\ell}}$

Where l = length of survey line

→ In this method error in latitude and departure is distributed in the ratio of length.
e_D = Total error in departure
e_L = Total error in Latitude
then, correction in departure = $C_D = -e_D$
correction in latitude = $C_L = -e_L$

→ Correction in latitude = $C_{Li} = \left(\frac{\ell_i}{\sum \ell_i}\right) C_L$

Correction in departure - $C_{Di} = \left(\frac{\ell_i}{\sum \ell_i}\right) C_D$

Where - ℓ_i = length of survey line

(2) Transit Method :-

→ This method is used when accuracy of linear measurement is less than angular measurement.

→ In this method correction in latitude ad departure is distributed in the ratio of latitude or departures
$C_D = -e_D$ & $C_L = -e_L$

$C_{Li} = \frac{|L_i|}{\sum |L_i|} \times C_L$ and $C_{Di} = \frac{|D_i|}{\sum |D_i|} \times C_D$

where - L_i → latitude of survey line & D_i → departure of survey line

$\{\sum |L_i| = |L_1| + |L_2| + |L_3| + ... + |L_i|\}$

(3) Graphical Method :-

It is the graphical solution of bowditch method
It is used when,
Accuracy in linear measurement = Accuracy in angular measurement

(4) Axis Method :- This method is used when accuracy of angular measurement is much more in comparison of linear measurement.

CHAPTER - 5 (LEVELLING)

Levelling :-

Levelling is the branch of surveying which is used to determine elevation of object wrt datum and to calculate vertical distance between 2 - objects.

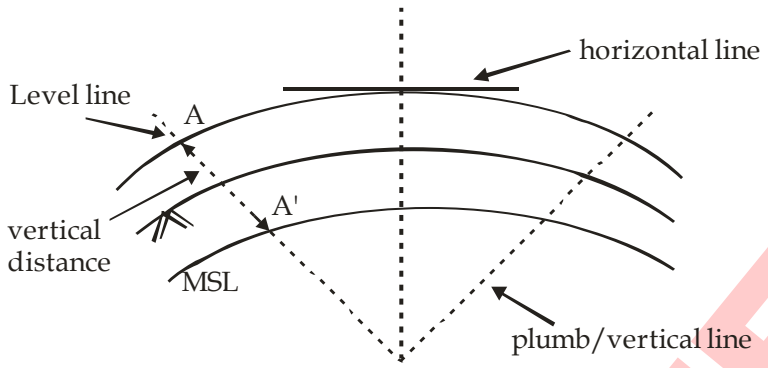

Level Surface :-

→ Curved surface which is perpendicular to plumb line at each point is known as level surface.

Level Line :- Curved line which is perpendicular to plumb line at each point (any line on level surface)

Horizontal surface :-

→ A plane which is perpendicular to plumb line at a point and tangential to level surface at that point is known as horizontal surface at that point.

Horizontal Line :-

→ A line which is perpendicular to plumb line and tangential to level line.

Elevation - Vertical height of an object above the datum surface.

Datum- A surface which is considered as the reference for determination of elevation.

Reduced level - Elevation of an object w.r.t. MSL.

Mean Sea Level - MSL is the avg height of sea level for all stages of tides which is calculated by taking avg. of sea level for a period of 19 years.

Bench mark- A point which RL is known is called bench mark

Type of Bench mark :-

(1) GTS (Great Trignometrical Survey) Bench mark -

→ These bench mark are stablished by survey of India at larger distance

(2) Permanant B.M -

→ These stations which are stablish by government organistations in between GTS bench mark

(3) Temporary B.M -

→ Those bench mark which are stablish during leveling process for temporary purpose are known as T.B.M

→ To establish T.B.M GTS B.M , P.B.M are used as reference.

(4) Arbitrary B.M -

→ If R.L of a point is assume arbitrary than it is known as arbitrary B.M

→ These B.M are used to calculate difference of vertical height betwen different objects.

ZONE TECH

Type of Levellings :-

(1) Barometric Levelling :-

→ Its based on principle that atmospheric pressure will be different at different elevations

(2) Hypsometry Levelling :-

→ Its based on principle boiling point of water will be different at different elevations.

(3) Indirect / Trigonometric Levelling :-

→ In this levelling by using horizontal distance and vertical angles. vertical distance is claculated which is used for calculation of elevation.

(4) Direct / Spirit Levelling

→ In this levelling vertical distance is measured with the help of level and staff

Type of Direct Levelling :-

(1) Differential levelling (2) Fly levelling (3) Precise levelling
(4) Profile levelling (5) Cross sectioning levelling (6) Reciprocal levelling

Instrument used in direct levelling :-

(1) Level

(2) Staff

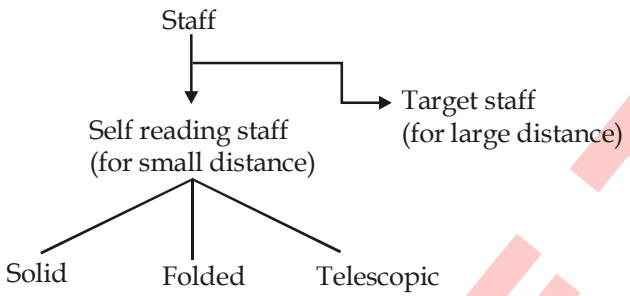

Componant of Level :-

(1) Telescope (2) Level Tube (3) Leveling head (4) Tripod

Back Sight (B.S) :- Ist reading taken from instrument position

→ It is taken at bench mark

Fore Sight (F.S) :- Last reading taken from instrument position.

→ After fore sight instrument is shifted or work is closed.

Intermediate Sight (I.S) ;-

All reading except 1st and Last reading which are taken from a instrument position are known as intermediate sight.

Change / Turning Point :-

Station at which fore sight and back sight both are taken is known as turning point.

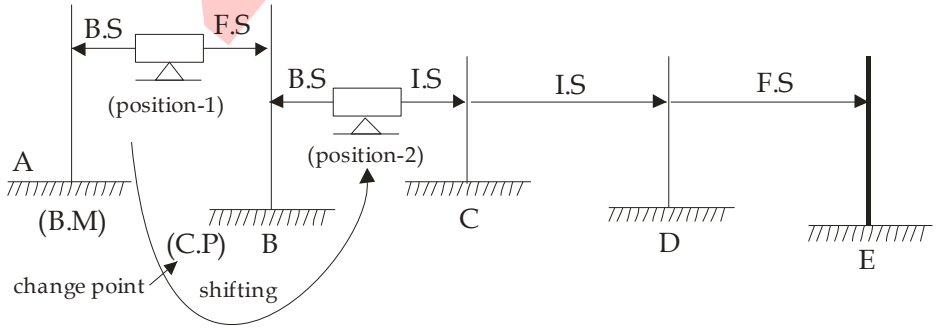

Methods of Direct Levelling :-

(1) Height of instrument method

(2) Rise and fall method

(1) Height of Instrument Method :-

→ In this method height of instrument (i.e height of line of sight) is calculated by taking back sight reading on bench mark and then after by deducting I.S/F.S from height of instrument, R.L of next station is calculated.

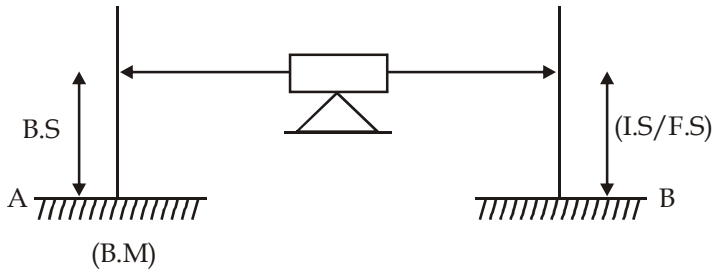

[H.I = R.L of B.M + B. S at B.M]

R.L of next station = HI – I.S/F.S

Check :-

(∑B.S – ∑F.S) = [R.L of last station - R.L of first station]

(2) Rise And Fall Method :-

→ In this method rise or fall of any survey station is calculated w.r.t. its previous station

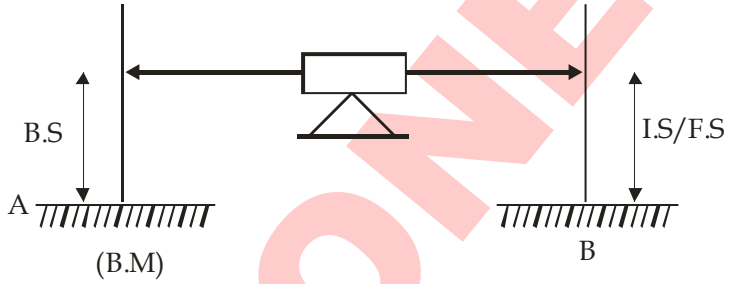

(Rise/Fall = Previous Reading - This reading)

= B.S at A - (IS/FS) at B

Positive → Rise

Negative → Fall

After that By using rise or fall, R.L of next station is calculated as following

[R.L of this station = R.L of previous station ± Rise /Fall]

Check :-

(∑B.S – ∑F.S) = (∑Rise – ∑Fall)

= (R.L of last station – R.L of 1st station)

Note :-

Height of instrument method (H.I) is simple and least time taking in comparison of rise/fall method

Inverted Staff

Case - I

When inverted staff is held at top point.

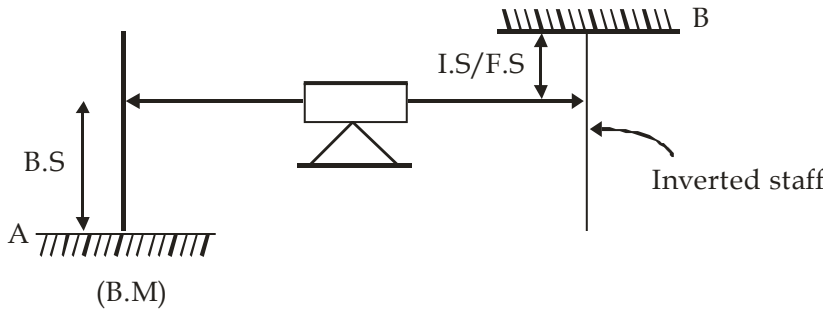

(H.I = R.L of A + B.S at A)

(R.L of B = H.I + (I.S/F.S) at B)

Case -II

When inverted staff in held on ground.

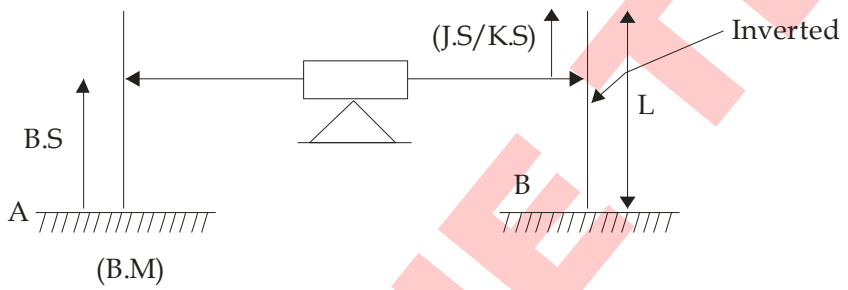

[H.I = R.L of A + B.S at A]

R.L of B = H.I -[L – (IS/FS)]

L = total length of staff

Curvature And Refraction Correction :-

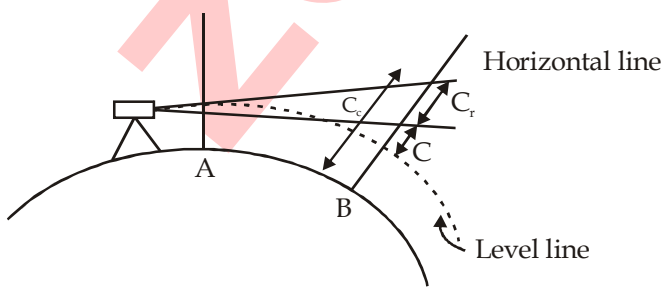

Correction for Curvature :-

→ During levelling process the staff reading should be taken corresponding to level line but telescope of level setup horizontal line, hence correction for curvature is required

ZONE TECH

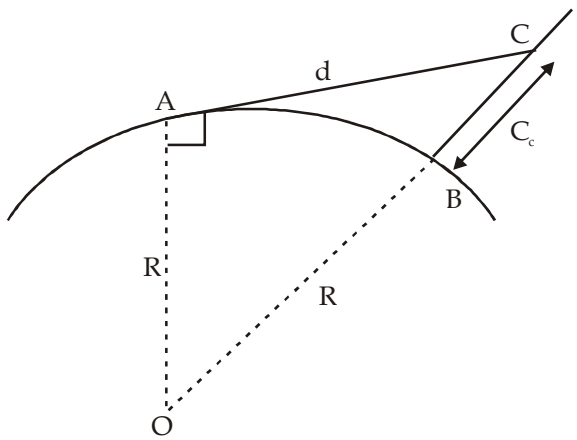

From Δ AOC

$(OC)^2 = (OA)^2 + (AC)^2$

$(R + C_c)^2 = R^2 + d^2$

$R^2 + C_c^2 + 2RC_c = R^2 + d^2$

$C_c^2 <<< 2RC_c$

$$\left(C_c = \frac{d^2}{2R}\right)$$

If R = Radius of earth (6370 km)

If d in km, then

$$C_c = \frac{d^2}{2 \times 6370} km = \frac{d^2}{2 \times 6370} \times 1000 \text{ m}$$

$C_c = 0.0785\ d^2$

where

C_c is in meter

d is in km

Correction For Refraction :-

→ Due to refraction, line of sight deflects towards earth surface from horizontal line, hence correction for refraction is required to calculate corrected staff reading.

→ Correction for refraction is considered as 1/7th of correction for curvature.

$$C_r = \frac{1}{7} \times C_c = \frac{1}{7}\left(\frac{d^2}{2R}\right)$$

$$= \frac{1}{7} \times 0.0785 d^2$$

$C_r = 0.0112 d^2$ ....

C_r → m & d → kilo meter (km)

Combined Correction :-

→ Correctin due to curvature is negative for staff reading and correction due to refraction os positive for staff reading hence combined correction for staff reading is calculated as following

correction due to curvature = C_c = – $0.0785 d^2$

correction due to refraction = C_r = $+0.0112\ d^2$

Hence combined correction for staff readings -

$C = C_c + C_r = -0.0785d^2 + 0.0112d^2$

$C = -0.0673\ d^2$

whre C → meter & d → km

Note :-

If level is stablished at mid point of both stations then there will be no requiremet of correction.

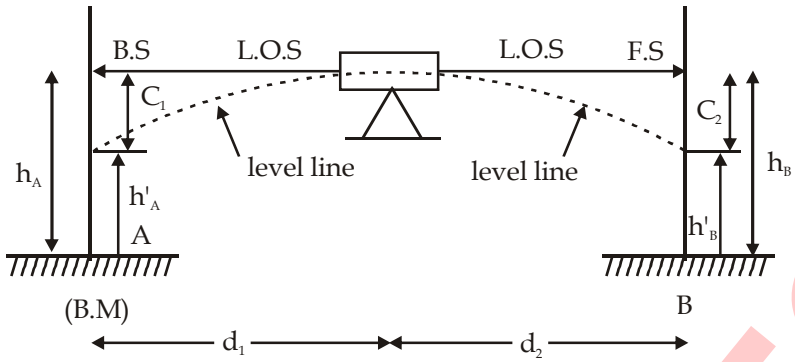

Correct difference of R.L of point A and B = H = $h'_B - h'_A$

h_A' = corrected staff reading at A = $h_A - C_1$

h_B' = corrected staff reading at A = $h_B - C_2$

Hence $H = (h_B - C_2) - (h_A - C_1)$

If $d_1 = d_2$, then $C_1 = C_2$

Hence $H = h_B - h_A$

Distance of Visible Horizon :-

→ Maximum distance upto earth surface which is visible from a given height is known as distance of visible horizon

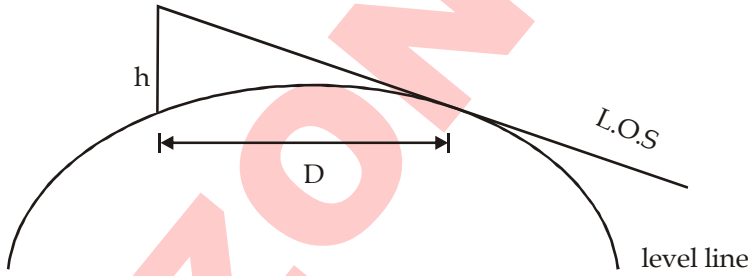

If D is distnace of visible horizon from a height h, then

$h = 0.0673\ D^2$

$$D = \sqrt{\frac{h}{0.0673}} = 3.855\sqrt{h}$$

where

h → meter & D → km

Reciprocal Levelling

→ In reciprocal levelling staff readings are taken by fixing the instrument near to both stations one by one.

→ In reciprcal levelling error due to curvature and refraction can be eliminated.

→ By reciprocal levelling collimation error can be calculated.

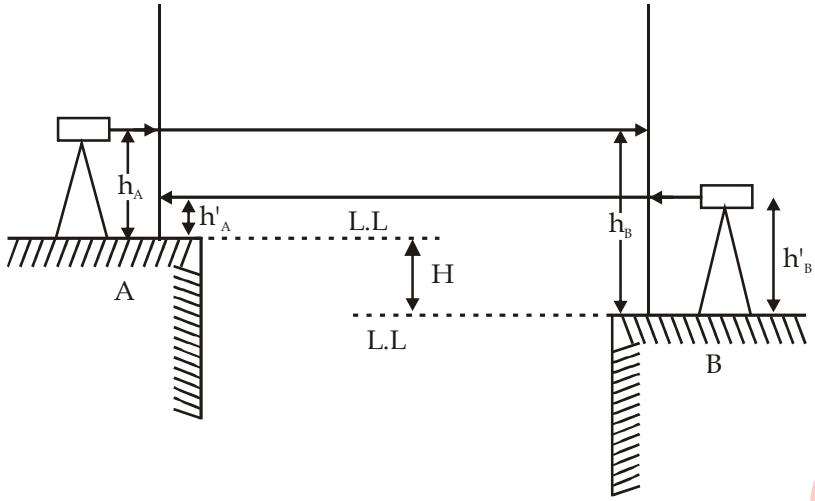

Case - I :-

When instrument nearer to A

corrected staff reading at A = h_A

corrected staff reading at B = $(h_B - C)$

then difference of R.L between A & B = H = $(h_B - C) - h_A$ .... (1)

Case-II :- When instrument nearer to B -

corrected staf reading at A = $(h'_A - C)$

corrected staf reading at B = h'_B

then difference of R.L between A & B

$H = h'_B - (h'_A - C)$ .... (2)

From (1) & (2)

$2H = (h_B - C) - h_A + h'_B - (h'_A - C)$

$2H = (h_B + h'_B) - (h_A + h'_A)$

corrected reduced level difference = $\left[H = \frac{(h_B + h'_B) - (h_A + h'_A)}{2}\right]$

Sensitivity of Bubble Tube :-

→ Sensitivity of bubble tube is defined as the angular movement which is required to move the bubble by single graduation.

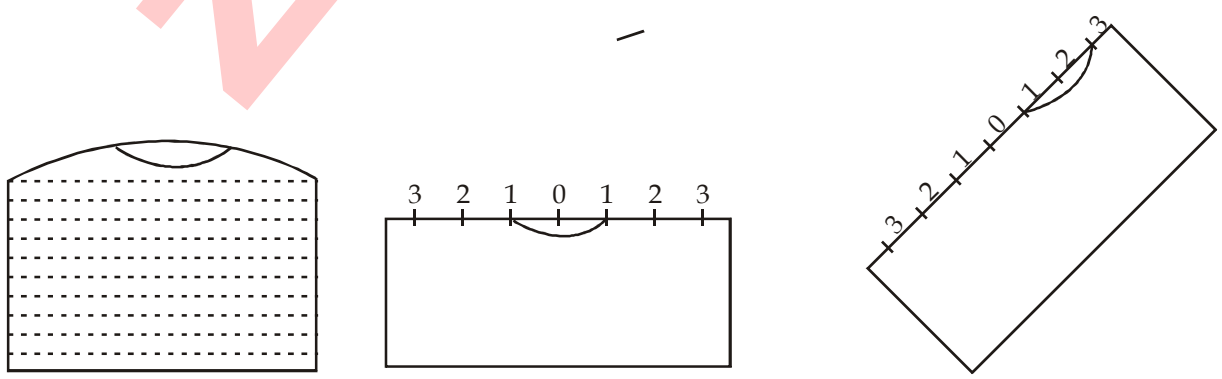

→ Liquid used in bubble tube generally → "Spirit" (synthetic alcohol)

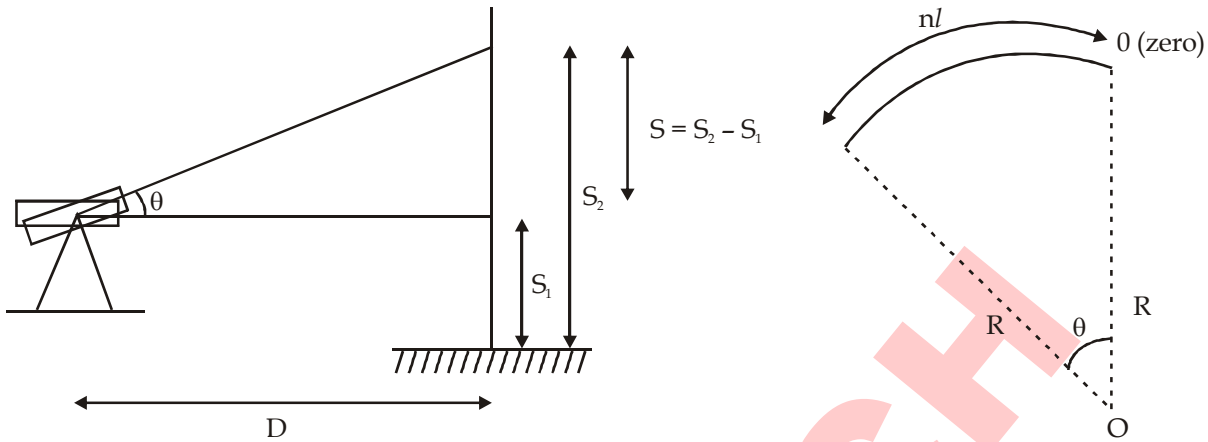

l = length of one graduation

$\theta = \frac{n\ell}{R}$ .... (1)

$\tan\theta = \frac{S}{D}$ .... (2)

from (1) & (2)

$\theta = \frac{n\ell}{R} = \frac{S}{D}$

If sensitivity of bubble tube is α then = $\alpha = \frac{\theta}{n}$

$\alpha = \frac{\ell}{R} = \frac{S}{nD}$

where

R → Radius of curved surface

Sensitiveness of bubble tube can be incresed by -

(1) Increase in radius of curvature

(2) Increase in dia. of bubble tube

(3) Decreasing viscosity of fluid

(4) Decreasing roughness of surface

→ Tube for which value of sensitivity (α) is high then tube is said to be less sensitive.

Note :-

With increase in temp. fluid of bubble tube expands due to which size of bubble decrease, hence sensitiveness of bubble tube decreases.

Error in Levelling

ZONE TECH

→ **Errors in levelling :-**

(1) Error due to instrument

(2) Error due to self (personal error)

(3) Natural error

(1) Error Due to Instrument :-

→ Due to improper adjustmet of level.

→ Due to defective bubble tube

→ Due to defective staff

→ Due to defective tripod

(2) Personal error :-

→ Error in levelling

→ Error in reading

→ Error in calculation

→ Non-verticality of staff

(3) Natural error :-

→ Error due to curvature, refraction and temperature variation

Contouring

→ An imaginary line which join the point of equal elevation is known as contour line.

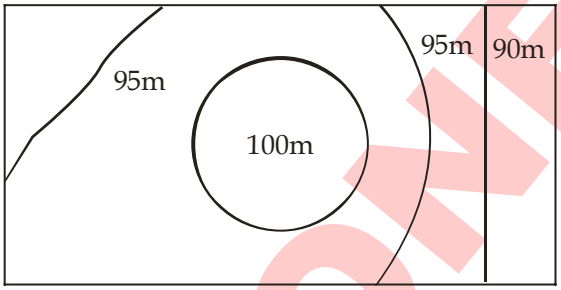

Contour Interval : Vertical distance between two consecutive contour line

→ Contour interval is kept constant for a map.

Horizontal Equivalent :- Horizontal distance between two consecutive contour line at any point is known horizontal equivalent.

→ Horizontal equivalent may or may not be constant

Characterstics of contour :-

→ Close contour lines represents steep slope.

→ If contour lines are far apart (distant) than they will represent mild or flatter or gentle slope.

→ Equally spaced contour lines represernts uniform slope.

→ Straight parallel and equally spaced contour lines represents a plane surface.

→ If contour lines form a closed loop, than it will represent hill or depression.

→ If contour value increases towards center then it will represent hill.

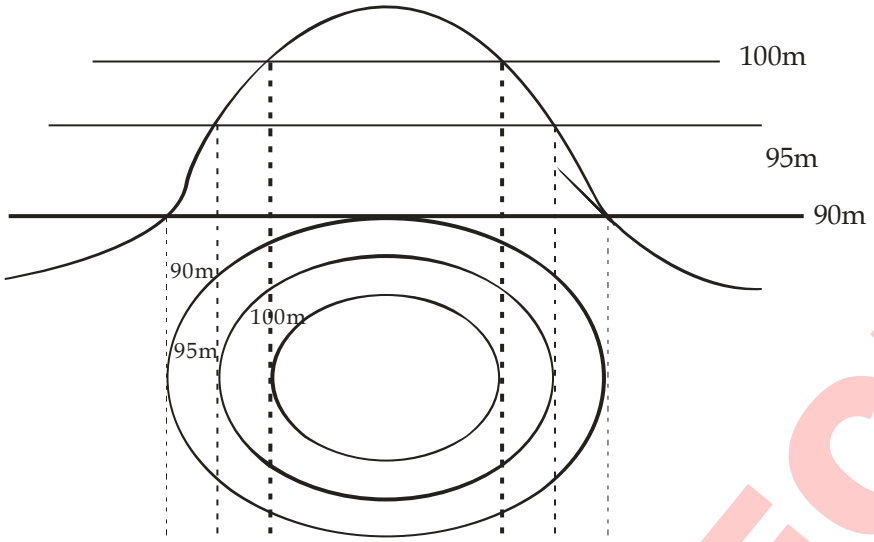

→ If contour value decreases towards center, then it will represent a depression.

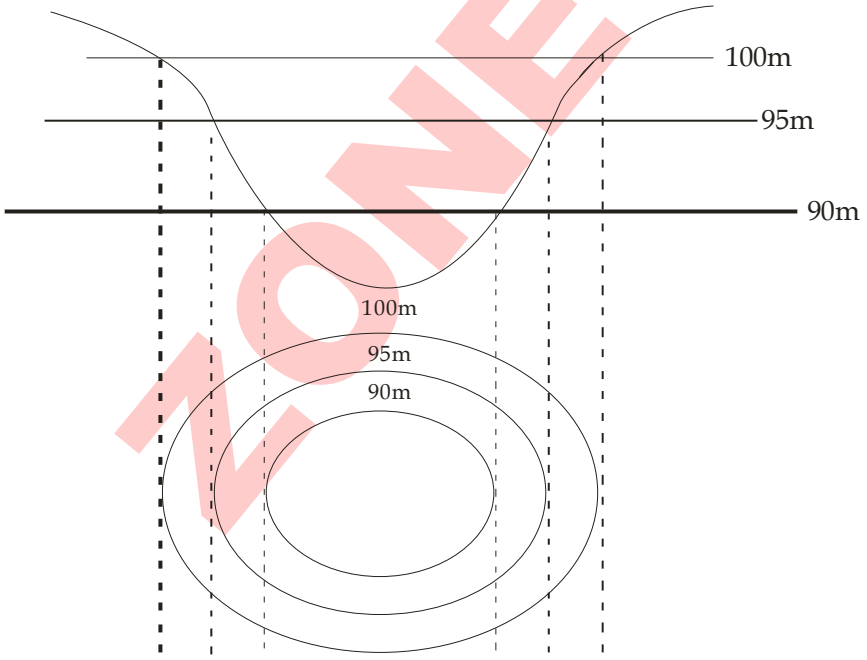

→ Contour line must closed itself, but for given limit of map it may be close or open

→ Different contour lines can't meet except in case of vertical cliff.

ZONE TECH

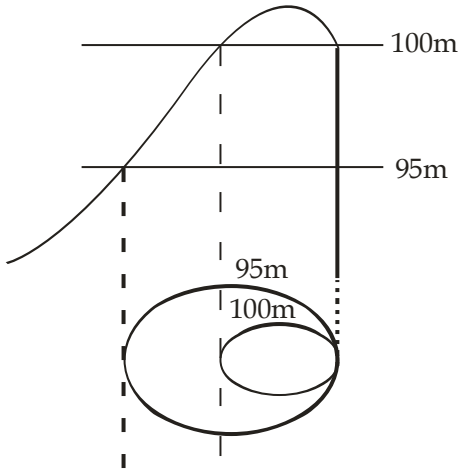

→ diferent contour lines can't intersect each other except in case of over-hanging cliff.

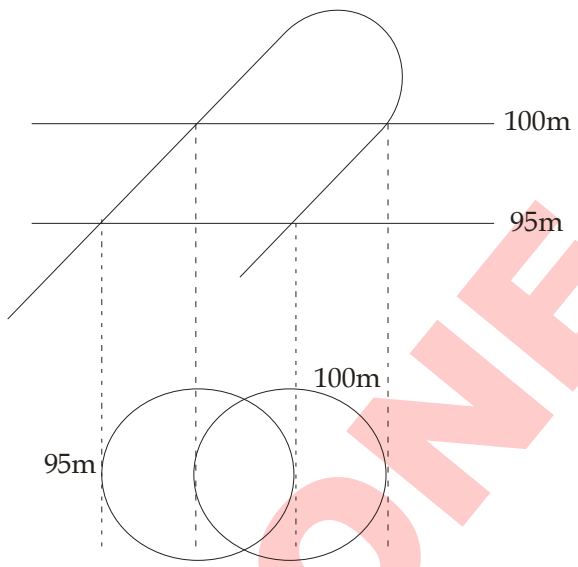

→ Contour lines intersect ridge line and valley line at 90° angle

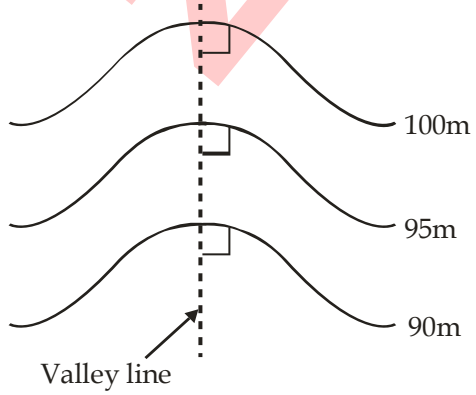

Concave towards the lower elevation

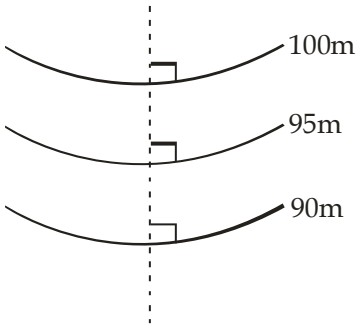

Concave towards the upper elevation

ZONE TECH

→ Concave towards the lower elevation
→ Concave towards the upper elevation

Methods of Contouring :-

(1) Direct Method :-

→ In direct method R.L of those points is calculated for which contour is to be plotted.
→ Accuracy of this method is more but this method consumes more time
→ Generally direct method is used when contours are plotted for smaller area with higher accuracy.

(2) Indirect Method :-

→ In this method R.L of some reference point is calculated and then by interpolation those points are determine for which R.L is to be calculated (for which contour is to be plotted)

Type of indirect Method :-

(1) Square / Grid Method
(2) Cross-Sectoning Method

Use of Contours :-

(1) To check the visibility of stations
(2) To calculate the volume of reservoir
(3) To locate the profite of any route
(4) Tracing of contour gradient

Contour Gradient :-

A line on surface which has constant slope with horizontal is known as contour gradient

ZONE TECH

CHAPTER - 6 (THEODOLITE)

Theodolite

→ A theodolite is an instrument which is used primarily to measure angles, both horizontal and vertical. It is also used for many other subsidiary work during surveying such as setting up of intermediate points between inter visible points, establishment of inter visible points, prolonging a line, laying out traverse etc.

Type of theodolite :-

(a) Transit Theodolite : Theodolite in which line of sight can be reversed by revolving the telescope in vertical plane

(b) Non - Transit / Plain Theodolite

1. Different Parts of Varnier Theodolite

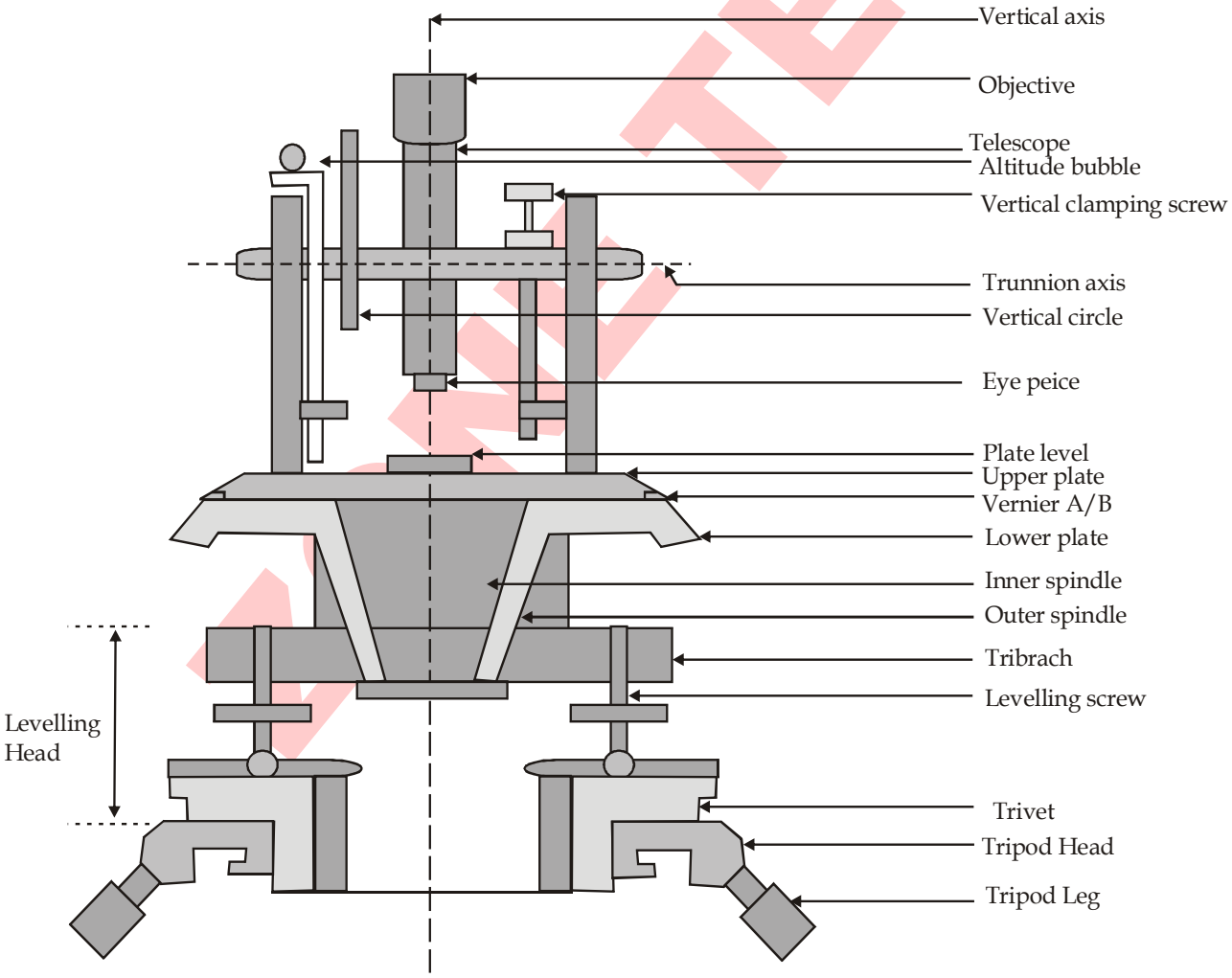

(i) Telescope

(1) External focussing telescope

(2) Internal focussing telescope (concave lense is used).

A telescope is a focusing instrument which has object piece at one end and eye piece at the other end. It rotates about horizontal axis in vertical plane.

(ii) Vertical circle

Vertical circle is fitted to telescope and moves simultaneously with telescope. It has graduation in each quadrant numbered from 0 to 90 degrees.

(iii) Vernier Frame

Also called T-frame or index frame, consists of a vertical leg known as clipping arm and a horizontal bar called the index arm with verniers at its ends.

(iv) The Standards

The standards are the frames which supports telescope and allow it to rotate about vertical axis. Generally, these are in letter A-shape. So, standards are also called as A-frame.

(v) The Upper Plate

This is also called as vernier plate. The top surface of upper plate gives support to the standards. It is attached to the inner spindle. It also consists an upper clamping screw with respect to tangents screw which helps to fixing it to the lower plate.

(vi) The Lower Plate

This is also called as scale plate. Because it contains a scale on which 0 to 360 readings are graduated. It is attached to the outer spindle and consists lower clamping screw. If lower clamp screw is loosened and upper clamp screw is tightened, both plates can rotate together. Similarly, if lower clamping screw is tightened and upper clamp is loosened then, only upper plate is movable and lower plate is fixed with tribrach plate. The size of theodolite is defined on the basis of diameter of lower plate.

(vii) Plate Levels

A pair of level tubes are placed at right angles on the upper plate. These are used to make the vertical axis of the instrument truly vertical i.e. for levelling of the instrument.

(viii) Tripod

Tripod is nothing but a stand on which theodolite is mounted. It should place in such a way that theodolite should be in exact levelled position. The tripod has legs with steel shoes at their ends. These hold the ground strongly without any movement when placed.

(ix) Altitude Bubble

A sensitive level tube placed on Vernier frame or Telescope is called altitude bubble. It is used to make horizontal axis truly horizontal

(x) Levelling head

It is a combination of two triangular plate and levelling screw.

(xi) Striding level

A level is parallel to horizontal axis, It is used to test horizontality of trunnion axis.

2. Temporary Adjustmet of Vernier Theodolite

Temporary adjustment of a Vernier theodolite consists of following operations

$\rightarrow$ Setting $\rightarrow$ Centring $\rightarrow$ Levelling $\rightarrow$ Focussing

Focusing

To obtain the clear reading, the image fromed by the objective lens should fall in the plane of diaphragm and the focus of eye-piece should also be at the plane of diaphragm. Thus focusing operation involves two steps.

(a) Focusing of the eye-piece lens

(b) Focusing of the objective lens

[**Note :** When image doesn't form in plane of cross hair, then movement of eye is likely to cause an apparent movement of image, this known as parallax. To eliminate parallax, focusing is done]

3. Fundeamental Lines of a Theodolite

The fundamental lines are imagined in a theodolite instrument are

1. Vertical Axis
2. Horizontal axis
3. Line of collimation
4. Axis of the altitude level tube
5. Axis of the plate level

(i) Vertical Axis :

It is the axis about which the telescope can be rotated in the horizontal plane.

(ii) Horizontal Axis :

It is also called the trunnion axis or the transverse axis. It is the axis about which the telescope can be revolved in the vertical plane.

(iii) Line of Collimation :

It is also known as the line of sight. It is the imaginary line joining the intersection of the crosshairs of the diagram to the optical centre of the object glass and in its continuation.

(iv) Axis of the Level Tube :

It is also called the bubble line. It is a straight line tangential to the longitudinal curve of the level tube at the centre of the tube. It is horizontal when the bubble is central.

4. Relations among Fundamental Lines :

In a perfectly adjested instrument , the fundamental lines bear relations as follows.

1. The vertical cross hair should lie in a plane perpendicular to the horizontal axis.
2. The axis of each plate level should lie in a plane perpendicular to the vertical axis.
3. The horizontal axis should be perpendicular to the vertical axis.
4. The axis of the telescope level should be parallel to the line of sight
5. The line of sight should be perpendicular to the horizontal axis at its intersection with the vertical axis

5. Fundamental Definitions / Terms :

(i) Transiting :

It is also known as plunging or reversing. It is the process of turning the telescope about its horizontal axis in the vertical plane.

(ii) Swinging the Telescope :

It means turning the telescope about its vetical axis in the horizonatl plane. If the movement is in clockwise direction then it is called right swing and if movement is in anticlockwise direction then it is called left swing.

(iii) Face Left :

If the vertical circle of the instrument is on the left of the observer while taking a reading, the position is called the face left and the observation taken on the horizontal or the vertical circle in this position, is known as the face left observation.

(iv) Face Right :

If the vertical circle of the instrument is on the right of the observer while taking a reading the position is called the face right and the observation taken on the horizontal or the vertical circle in this position is known as the face right observation.

(v) Changing Face :

It is an operation of bringing the face of telescope from left to right or vice versa

(vi) Telescope normal condition ;

Face left position or bubble up condition is known as normal condition

(vii) Telescope inverted condition

Face right position or bubble down condition is known as inverted condition.

6. Measurement of Direction using Theodolite

(i) Measurement of Horizontal Angle

(a) Horizontal angle measurement by method of Repetition

(b) Horizontal angle measurement by method of Reiteration

(ii) Measurement of Vertical Angle

(a) Method of Repetition

When the precision of measurement of a horizontal angle is desired to be more, then repetition method is used. In this method, the desired angle is measured several times, and average of the observed values is considered as the value of angle

(b) Method of Reiteration

Method of reiteration for measurement of horizontal angle is usually adopted in case several angles of well distributed points/objectes are to measured from the same instrument station

7. Use of theodolite ;-

→ Measurement of magnetic bearing of a line

→ To measure direct angles

→ Measurement of deflection angles

→ To located the point of intersection

→ To prolong the straight line.

Permanent Adjustment of Thedolite

1. Relations among Fundamental Lines

In a perfeetly adjusted instrument, the fundamental lines bear relations as follows :

1. The vertical cross hair should lie in a plane perpendicular to the horizontal axis.
2. The axis of each plate level should lie in a plane perpendicular to the vertical axis
3. The horizontal axis should be perpendicular to the vertical axis.
4. The axis of the telescope level should be parallel to the line of sight
5. The line of sight should be perpendicular to the horizontal axis at its intersection with the vertical axis

Note :-

Error due to improper adjustment between line of sight and horizontal axis can be eliminated by taking both face observation.

→ Error due to eccentricity of verneir and main scale can be eliminated by reading both verneirs.

→ Error due to non uniform graduation of main scale can be eliminated by taking successive reading for angle without setting vernier at and then value of angle =

$$\frac{\text{Final reading}}{\text{no of repation}}$$

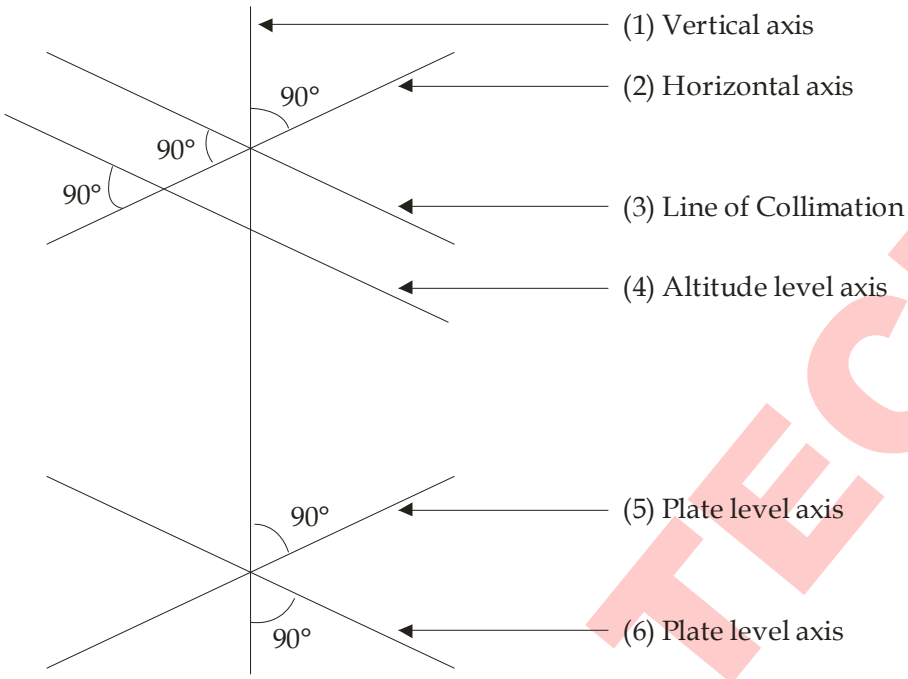

1. (5) & (6) $\perp$ (1)
2. (2) $\perp$ (1)
3. (3) $\perp$ (2)
4. (4) $\parallel$ (3)

2. The permanent adjustment should be made in the order.

(i) Adjustment of vertical cross hair
(ii) Adjustment of plate level axes
(iii) Adjustment of line of sight
(iv) Adjustment of horizontal axis
(v) Adjustment of vertical circle index

2.1 Permanent adjustment of vertical cross hair of telescope of transit

The vertical cross hair should lie in a plane perpendicular to the horizontal axis.

Test : To conduct a test for this, first the instrument is to be temporarily adjusted on any station and sight a well defined point object at a distance of about 100m. Get the object point bisected on the vertical cross hair. Keeping both the upper and lower plate main screw clamped, swing te telescope in vertical direction. If the point appears to move continuously on the

ZONE TECH

vertical hair, the cross hair lies in a plane perpendicular to the horizontal axis

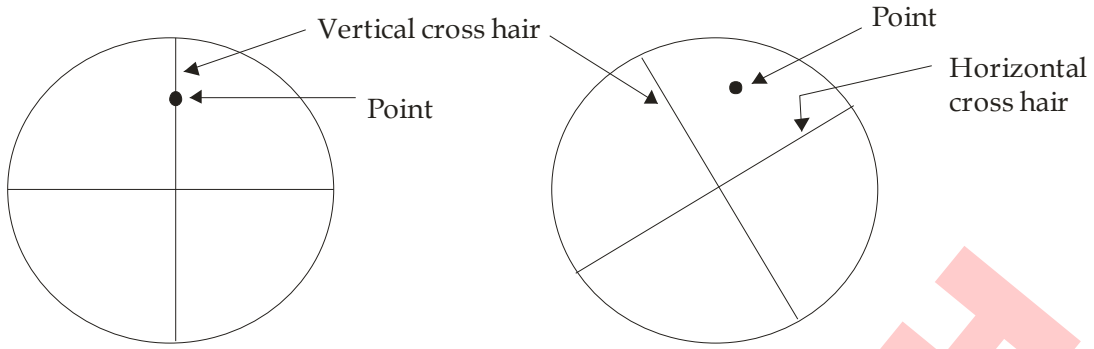

(a) Truly vertical (b) Not Truly vertical

Adjustment :- If the point object appears to depart from the cross hair, loosen two adjacent capstan screws and twist the cross hair ring in the telescope tube, so that the point appear on the vertical cross hair. Tighten the two screws. Carry out the test again and make adjustment, if required , untill the point traverses the entire length of the hair as the telescope is swung in vertical direction.

2.2 Permanent adjustment of Plate Level axes of transit

The axis of each plate level should lie in a plane perpendicular to the vertical axis.

Test : Set the instrument on firm ground. Level the instrument in the two positions at right angles to each other as in temporary adjustment.

Swing it through 180°, if bubble remain central adjustmet is correct otherwise adjustment is required.

Adjustment : If the bubble in any level tube displaced from centre, bring it back halfway by adjusting two foot screws parallel to it and other half by adjusting the capstan screws fitted at one end of the plate level tube. Rotate the whole instrument through 180° and repeat the steps of testing and adjustment if required till the bubble remains central for all positions of the instrument as it revolved through 360° about the vertical axis.

Principle involved : In this method principle of reversion is used in which apparent error becomes two times of true error.

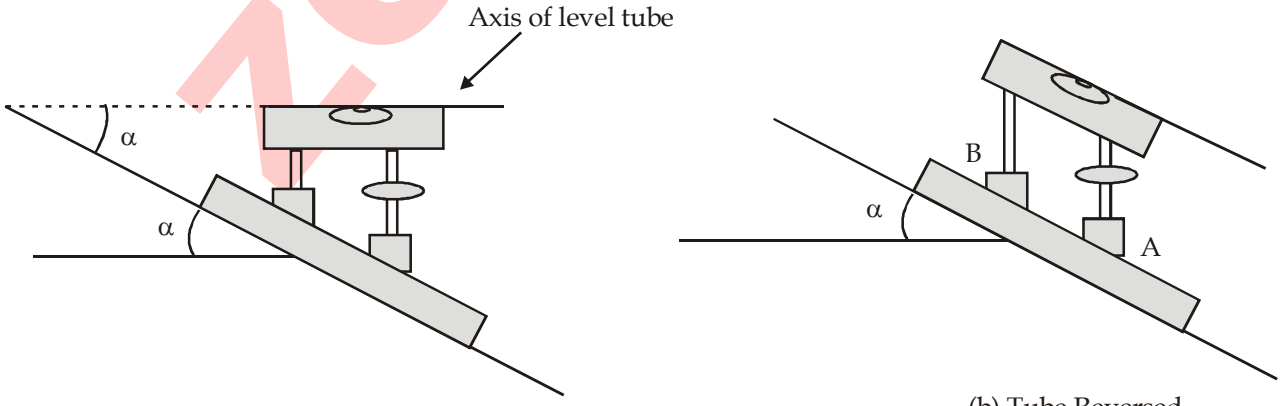

(a) Bubble centred but instrument not level (b) Tube Reversed

ZONE TECH

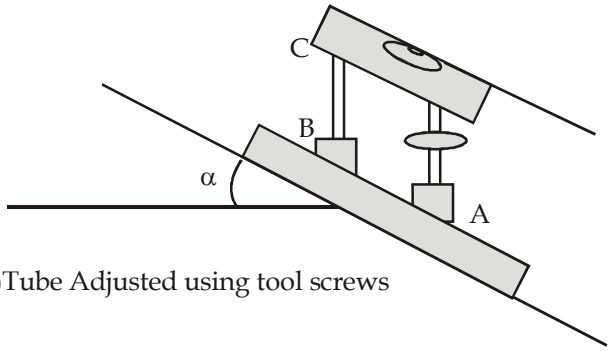

(c)Tube Adjusted using tool screws

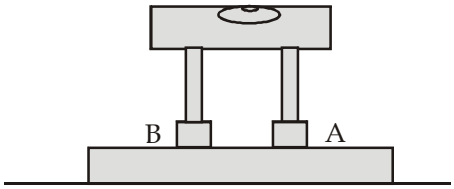

(d) Instrument leveled using capstan screw

2.3 Permanent adjustment of Line of Sight of transit

In a properly adjusted instrument, the line of sight should coincide with the optical axis of the telescope.

Test : In order to test, it first the instrument is temporarily adjusted on a station and sight a point say, X about 150m away from the station point with telescope in the direct position. Keeping main screws of both the upper and lower plates of the instrument clamped, plunge the telescope and set another point Y in the opposite direction of the transit. Open the lower plate clamp screw and swing the instrument about the vertical axis to bring X again on the vertical cross hair. Tighten the lower plate clamp screw and plunge the telescope as before; if Y appears on the vertical cross hair, the line of sight is perpendicular to the horizontal axis.

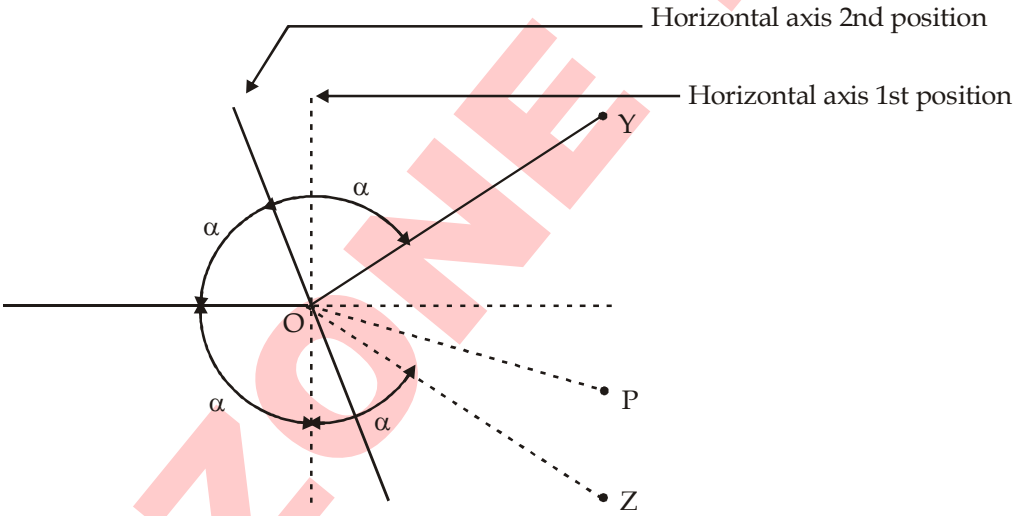

Adjustment : If Y does not appear on the vertical cross hair, set a point Z on the line of sight of the instrument. Mark another point P, one fourth of the distance from Y to Z and adjust the cross hair ring (by means of the two opposite horizontal screws) until the line of sight passes through P. Tighten the diaphragm screws, keeping the vertical hair in that position. Repeat the test and adjustment till X and Y points, before and after plunging, is in the same line of sight of the telescope. The points sighted should be at about the same elevation as the transit.

2.4 Permanent adjustmet of Horizontal Axis of telescope/transit

The horizontal axis is required to be perpendicular to the vertical axis.

Test : In order to test it first the instrument (in face left condition) is temporarity adjusted in front of high building or structure on which a well defined point, say X can be marked at

ZONE TECH

considerable height. Then opening the vertical clamp, sight at the point X in such a way that the point appears on the vertical cross hair of the telescope. Now with the horizontal motions clamped, depress the telescope and set a point Y on or near the ground. If the horizontal axis is perpendicular to the vertical axis, X and Y will be in the same vertical plane. Then, bisect the point X again in the face right condition. On depression of the telescope as before, if the line of sight falls on Y, the horizontal axis is perpendicular to the vertical axis.

Note :- This test is known as spire test.

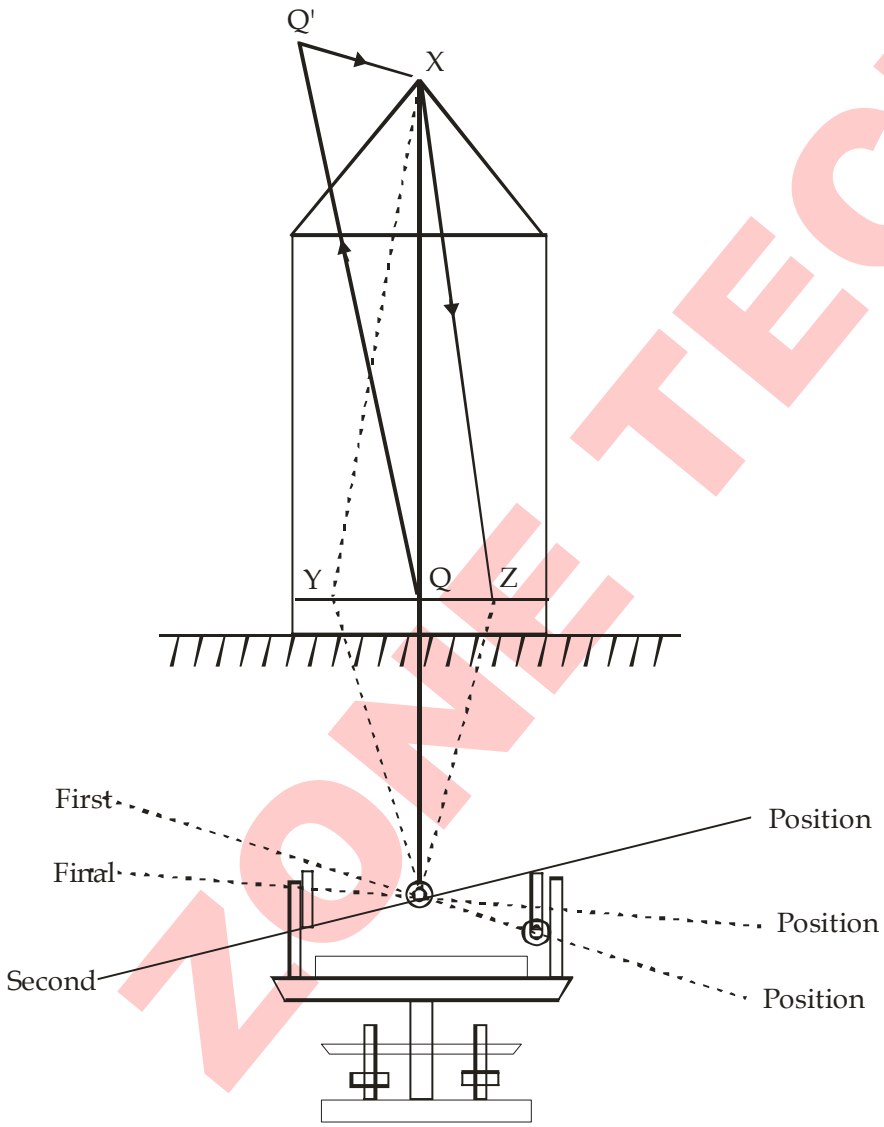

Adjustment :- On depression of the telescope (on face right condition) if the line of sight does not falls on Y, but a some other point say Z, the instrument requires adjustment. Now select another point say Q, halfway between Y and Z and at the same level should be marked. The telescope is then focused the point in such a way using upper plate tangent screw that Q

appears on the vertical cross hair and then, elevate the telescope until the line of sight is beside X and raise or lower the adjustable end of the trunnion axis until the line of sight is intersects X.

When the trunnion axis has been adjusted, the line of sight intersects both X and Q as the telescope is rotated about the vertical plane about the horizontal axis.

2.5 Permanent Adjustment of Vertical Circle Index of Transit.

The object of this adjustmet is to set the vertical circle to zero when the line of sight is horizontal and the altitude bubble is centered

Test - Set an instrument in face left condition and get it temporary adjusted. Center the ealtitude bubble and read the vertical vernier. Now, change the instrument in face right condition and the vertical vernier after centering the altitude bubble. If the 0 of the vernier scale coincides with the 0 or 90 of the main scale, there is no vernier index error in the instrument.

Adjustment : If the vernier does not read zero, loosen it and move it until it reads zero. Care should be so taken that the vernier does not bind on the vertical circle as the telescope is rotated about the horizontal axis.

Permanent Adjustment of Level

1. Axis of the level tube is Perpendicular to the Vertical axis

Test : After setting and leveling the level, turn the telescope through 180° about its vertical axis. If the bubble remains central, the axis of the level tube is perpendicular to the vertical axis. Otherwise, a displacement of the bubble from the central position indicates that the tube is not in adjustment. The amount of displacement is double the amount of error, by the principle of reversion.

Principle involved ;- In this method principle of reversion is used in which apparent error becomes two times of true error.

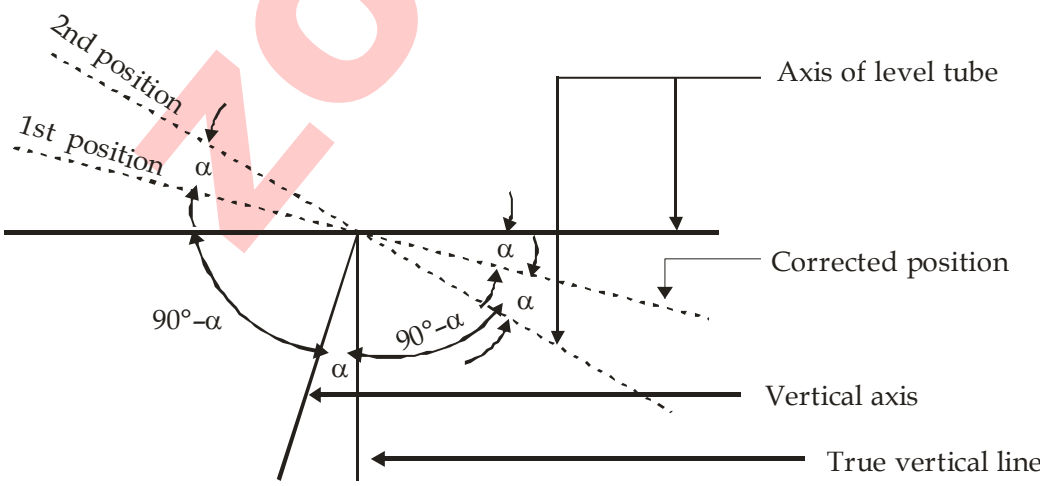

Adjestment

Step 1 : With the help of capstan screw, one end of the level tube is raised or lowered, as needed, so that the bubble is halfway back ot the centre position.

Step 2 : With the help of leveling screws, the other half of the displacement is moved further to bring the bubble at centre. The steps are repeated until the adjustment is perfected.

2. Horizontal Cross Hair Should Lie in a Plane Perpendicular to the Vertical Axis

Test :- A well defined point is focused along the horizontal cross hair on one side of the field of view. The instrument (telescope) is then rotated about its vertical asix. If the point appears to travel along te horizontal cross-hair, the instrument is in adjustmet i.e. the horizontal cross - hair lies in a plane perpendicular to the vertical axis. Otherwise, there is a need for adjustment

Adjustment :

Let us rotate the instrument in such a way that the well defind point occupy a position on the opposite side of the field of view, say X'. The across hair ring is then rotated by loosening two adjacent capstan screws. Repeat the process until the point travels along the horizontal cross hair.

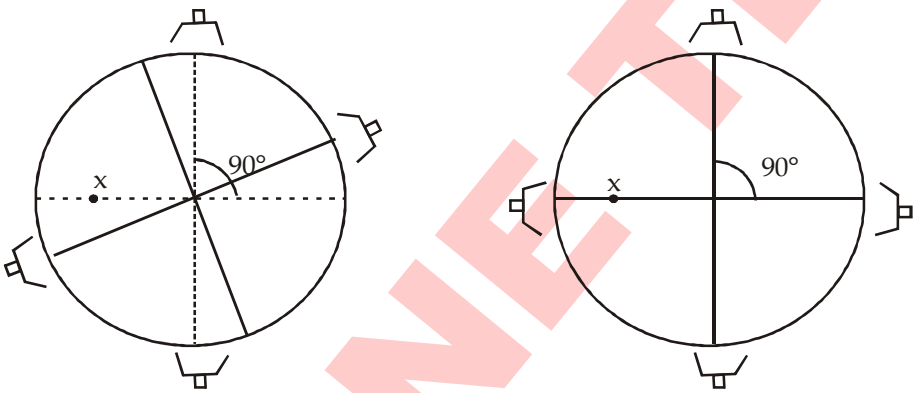

3. The Line of Collimation is Parallel to the axis of the Bubble Tube

Test : Two pegs are set at some distance (of about 60 to 90m) on a fairly level ground. A dumpy level is set up on a point which is equidistant from the pegs and preferably, in a line with the pegs. Staff readings are taken at the pegs, say the readings are a and b respectively. Then, the true difference in elevation between the points is h = (a - b). Now the instrument is set on the line joining the pegs near one of the pegs but opposite to the other peg, as shown in. Let D_1 and D_2 are the distances of the near and far peg from the instrument position. Staff readings are again taken at the pegs, say the readings are c and d respectively. Then the apparent difference in elevation between the pints h' = (c - d). Now if h' is found to be equal to h, the line of sight of the level is parallel to the axis of the bubble tube. Otherwise, an adjustment of the bubble tube is required.

Note :- This method is known as two peg method

ZONE TECH

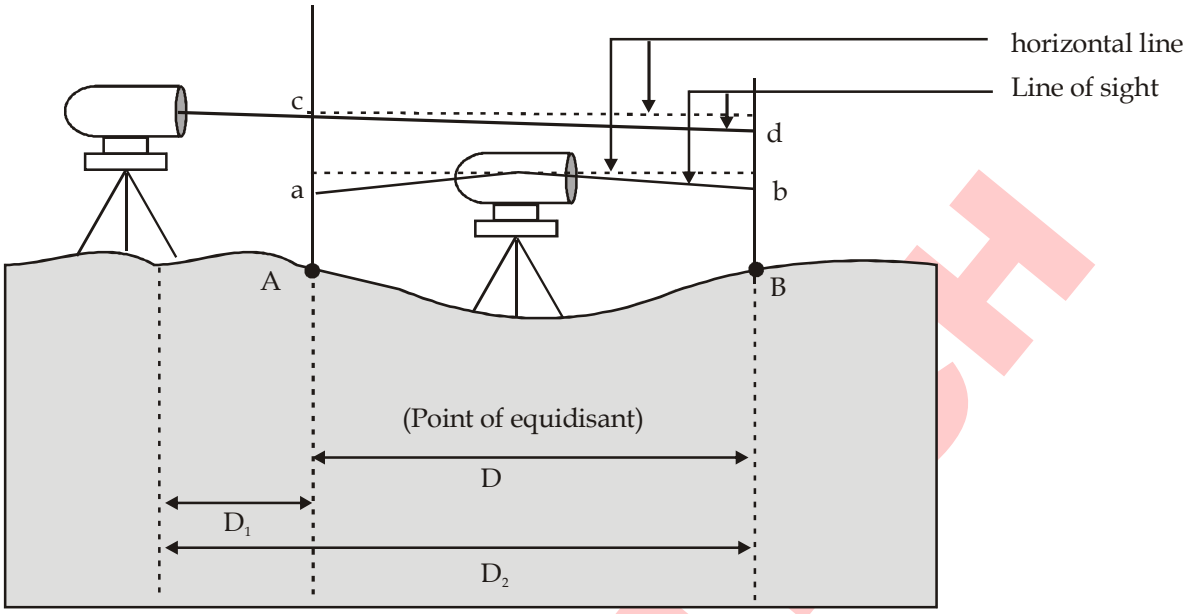

Adjustment

(i) Correct difference in elevation = h = (a - b)

(ii) Take the reading on the staff kept at A & B from instrument position Y.

Difference in elevation = h' = c - d

(iii) If h = h' then instrument is adjusted. If not it requires adjustment

(iv) The inclination of the line of sight in distance AB will be given as

$$\tan \alpha = \left(\frac{h - h'}{D}\right)$$

(v) The capstan screws at the top bottom of the diaphragm ring is then loosened and the ring is moved vertically so that h = h'

CHAPTER - 7 (PLANE TABLE SURVEYING)

Plane Table Surveying

A plane table surveying is a graphical method of surveying. In this method of surveying, field observation and plotting are done simultaneously.

1. Equipments for Plane Table Surveying

→ Plane table board
→ Tripod
→ Alidade
→ Plumbing fork with plumb bob
→ Spirit level
→ Trough compass
→ Drawing sheets

Plane Tables

The plane table consists of a drawing board with arrangement for fixing on a tripod stand.

Alidade

It is used for sighting in the direction of station. There are basically two type of alidade which are

(a) Plain Alidade (b) Telescopic Alidade

Plumbing Fork

A plumbing fork is a U-shaped piece of metal or wooded frame. Plumbing fork with a plumb bob is used in surveying for centring of plane table and for Transferring of ground point.

2. Temporary adjustment of plane table.

(i) Fixing : Fixing the table to the tripod
(ii) Setting
(a) Levelling
(b) Centring
(c) Orientation
(i) By means of Trough Compass
(ii) By means of backsighting
(iii) Sighting the points

3. Methods (System) of Plane Tabling

(1) Radiation :

→ In this method rays are drawn from the instrument station towards the point, the distance is measured between the instrument station and that point, and the point is located by plotting to some scale.
→ This method is suitable when distances are small.

→ It can be used if distance are obtained tacheometrically with the help of telescopic Alidade

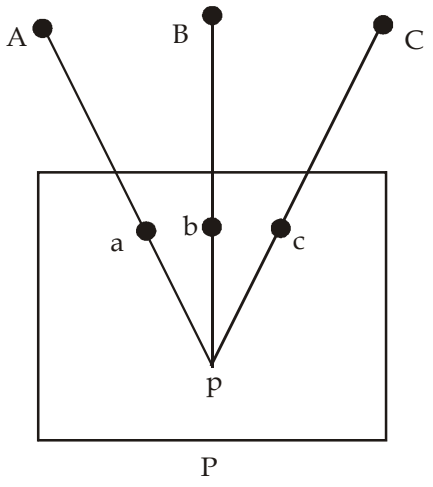

(ii) Intersection / Graphical Triangulation ;

→ This method is used when the distance between station and the point is too long or cannot be measured accurately.

→ In this method two stations are selected such that points (which are to be plotted) are visible from these stations. Line joining these stations is known as Base line

→ No linear measurement other than that of the base line is made.

→ Rays are drawn towards points from these two stations an intersection of rays (drawn from both stations) represents that point

(iii) Traversing :

→ In this method at each successive station the table is set, a foresight is taken to the following station and its location is plotted by radiation method.

→ Traversing is similar to radiation method but the difference is that in case of radiation the observations are taken to those points which are to be detailed while in case of traversing the observations are made to those points which will subsequently be used as instrument stations.

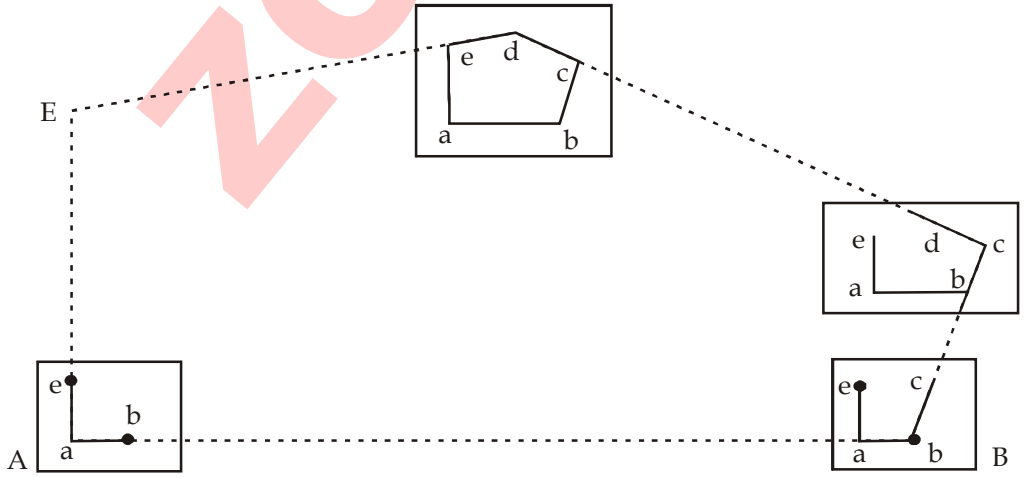

ZONE TECH

(iv) Resection :

Resection is the process of determining the plotted of the station occupied by the plane table, by means of sight taken towards known point, location of which have be plotted.

Methods of Resectioning :

(a) Two point Problem :

Location of the position on the plan, of the station occupied by the plane table by means of observation of two well defined points whose positions have been previously plotted on the plan.

In this method auxiliary (One additional station nearer to table position) station is required.

(b) Three point problem.

Location of the position on plan, of the station occupied by plane table by means of observation to three well defined points whose position have been previously plotted on the plan

Methods for three point problem

(i) Mechanical method (Tracing paper method)

(ii) Graphical method/Bessel's Method/Bessel's Method of Inscribed quadrilateral

(iii) Lehman's method (Trial & Error Method)

Lehman's Method :

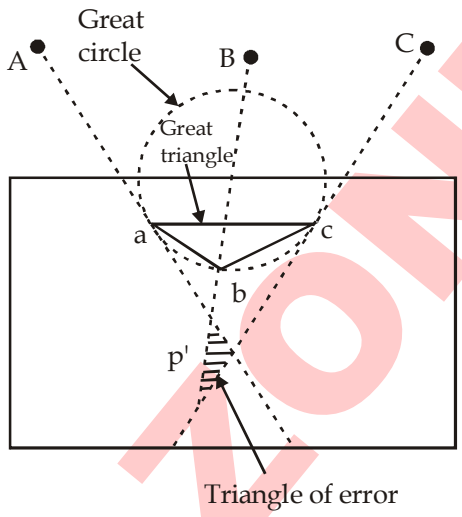

→ Line joining A, B, C or (a, b, c) form a triangle which is known as Great triangle

→ Circle passing through A, B, C or (a, b, c) is known as great circle.

(i) If the station 'p' is outside the great triangle ABC then triangle of error will also fall outside the great triangle abc and point P' should be chosen outside the triangle of error and vice-versa.

(ii) The point p' should be so chosen that its distance from the rays Aa, Bb, Cc is proportional to the distance of P from A, B, & C respectively.

(iii) The point P' should be so chosen that it is to the same side of all three rays Aa, Bb, Cc

Note ;

1. Two point problem & three point problems give both orientation as well as fixing location of station of position.

2. Two point problem does not give much accurate results. Two point problem are more labour involved between tables is also set on one more stations.

(1) Repetition Method :-

→ In this method angles measured successively without setting vernier at zero. during observation readings of both vernier are considered and then value of angle is calculated by dividing the final reading by number of repeations.

→ Above processis repeated for face left & face right both. and then after value of angle is calculated by taking average of both reading. (that is face left & face right)

ZONE TECH

CHAPTER - 8 (TACHEOMETRY)

Tacheometry Survey

→ Tacheometer is used to measure horizontal and vertical distances.

→ In techeometer a special type of cross hair is used which consists three horizontal lines, this cross hair is known as stadia cross hair.

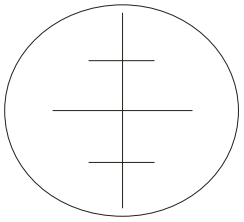

Stadia cross hair

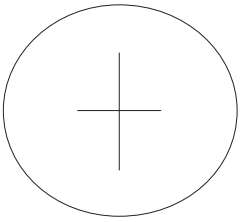

Normal cross hair

Type of telescope used in Tacheometer :-

(1) External focusing telescope
(2) Internal focusing telescope
(3) External focusing anallactic telescope

→ In external focusing telescope parallax is eliminated with the help of objective lense and eye piece.

→ In internal focuring telescope parallax is eliminated with the help of internal lense.

→ Multiplying constant of anallactic telescope is 100 and additive constant is zero

Tacheometer Equation :-

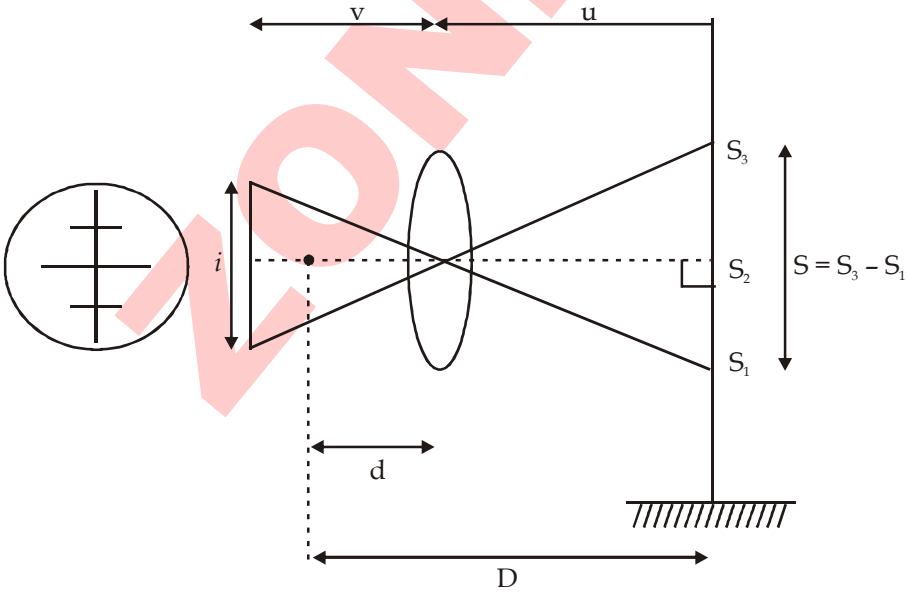

if focal length of lense is f then from lens equation

$$\frac{1}{f} = \frac{1}{u} + \frac{1}{v} \text{ .... (1)}$$

From property of similar triangle

$$\frac{i}{v} = \frac{s}{u} \Rightarrow v = \frac{ui}{s}$$

from equation (1) - $\frac{1}{f} = \frac{1}{u} + \frac{s}{ui} = \frac{(i+s)}{ui}$

$$u = \frac{f}{i}s + f....$$

Distance between instrument and staff :-

$$D = u + d = \left(\frac{f}{i}\right)s + (f + d) \qquad D = kS + C$$

where

D = distance between instrument and staff

$k = \frac{f}{i}$ = multiplying constant

f = focal length

i = stadia internal

s = staff intercept = $(S_3 - S_1)$

C = (f + d) → Additive constant

d = distance between center of instrument and lens.

Methods of Tacheometry Survey :-

(1) Stadia system (stadia c/s hair is used)

(i) Fixed hair method (for smaller distance)

(ii) Movable hair method (for large distance)

→ Tangential system (normal c/s hair is used)

Fixed hair method :-

(i) When staff is vertical

Case - I : For Elevation -

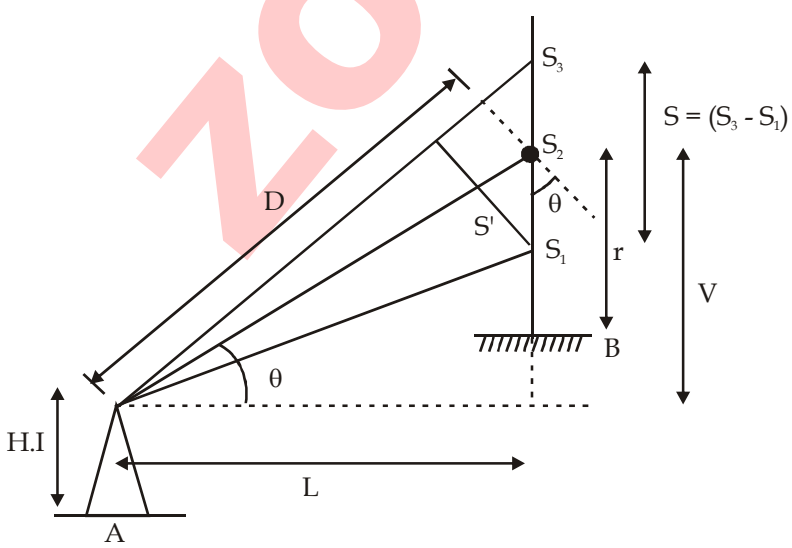

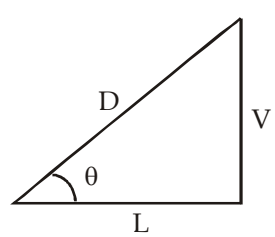

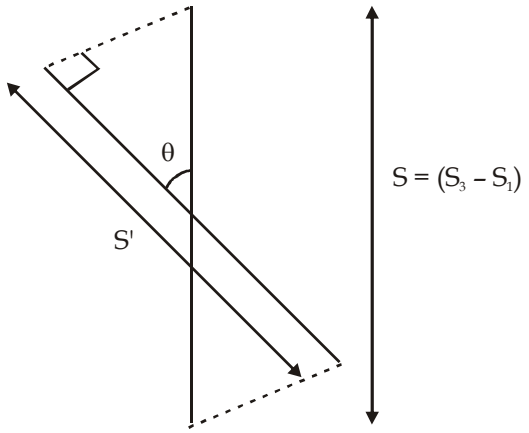

then S' = S cos θ

then O = kS' + C = kS cosθ + C

Horizontal distance between A & B

L = D cos θ = [kS cos θ + C] cos θ

V = D sin θ = [kS cos θ + C] sin θ

[R. L of B = R.L of A + H.I + v – r] ....

Case - 2 : For Depression :-

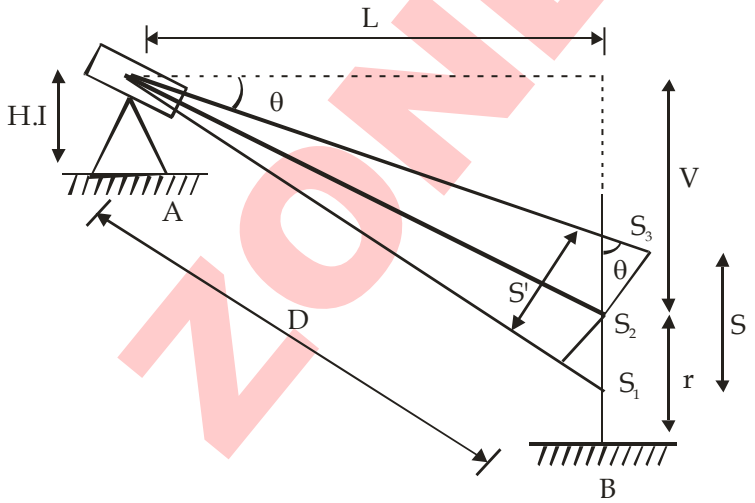

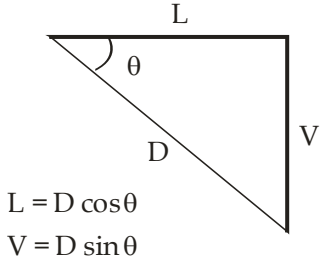

L = D cosθ

V = D sinθ

ZONE TECH

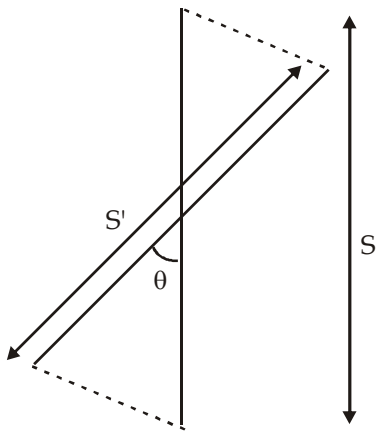

$S = S_3 - S_1$, then $S' = S \cos\theta$

then $D = kS' + c = ks \cos\theta + C$

Horizontal distance between A & B -

$L = D \cos\theta = [kS \cos\theta + C] \cos\theta$

→ $V = D \sin\theta = [kS \cos\theta + C] \sin\theta$

[R.L of B = R.L of A + H.I - V – r]

(B) When staff is normal :-

(i) For Elevation :-

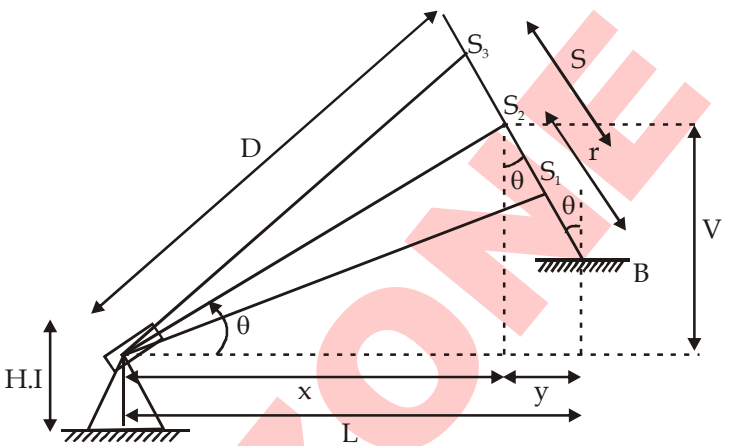

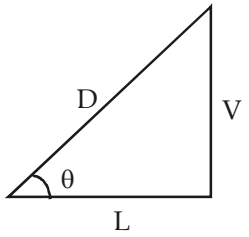

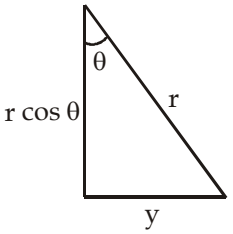

$S = S_3 - S_1$

From tacheometer equation $D = kS + C$

$x = D \cos\theta = (kS + C) \cos\theta$

$y = r \sin\theta$

$v = D \sin\theta = (kS + C) \sin\theta$

→ Horizontal ditance between A & B = L = x + y
[L = (kS + C) cosθ + r sin θ] .....
[R.L of B = R.L of A + H.I + V – r cos θ]

(II) For Depression :-

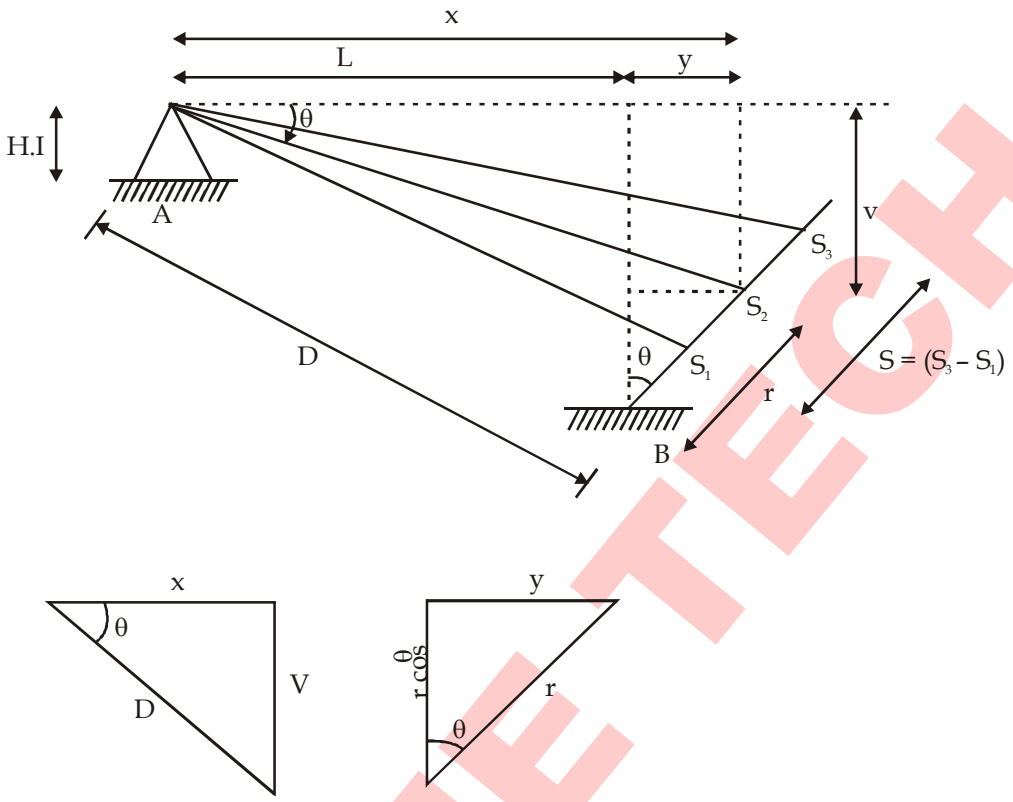

From tacheometer equation - D = kS + C
x = D cos θ, y = r sin θ, v = D sin θ, (kS + C) sin θ
Horizontal distance between A & B = L = x – y
[L = (kS + C) cos θ – r sin θ] ....
[R.L o B = R. L of A + H.I – V– r cos θ] ....

ZONE TECH

CHAPTER - 9 (TRIGNOMETRIC SURVEY)

Trignometric Survey (Normal C/S hair is used)

→ In trignometric survey horizontal distance and vertical distances are measured indirectly by using angles.

→ Generally this survey is used for determination of eleation.

(1) When distance between instrument & Base of station can be measured :-

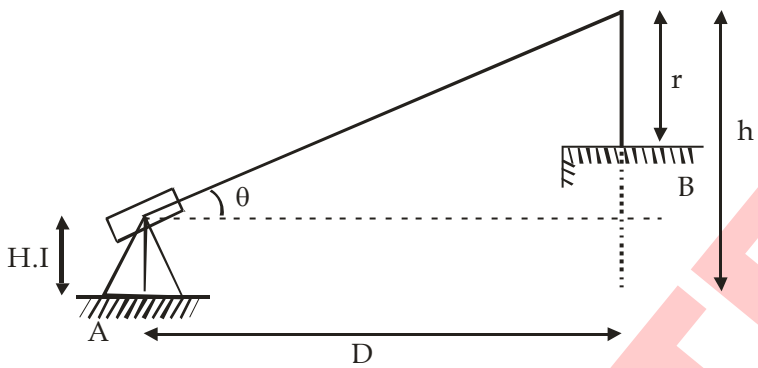

[R.L of B = R.L of A + H.I + h – r] ....

If correction of curvature & refractin 'c' is also considered , then -

[R.L of B = R.O of A + H.I + h – r + c] ....

(2) When distance between base of station and instrument cannot be measured but both instrument position are in same vertical plane with object (station)

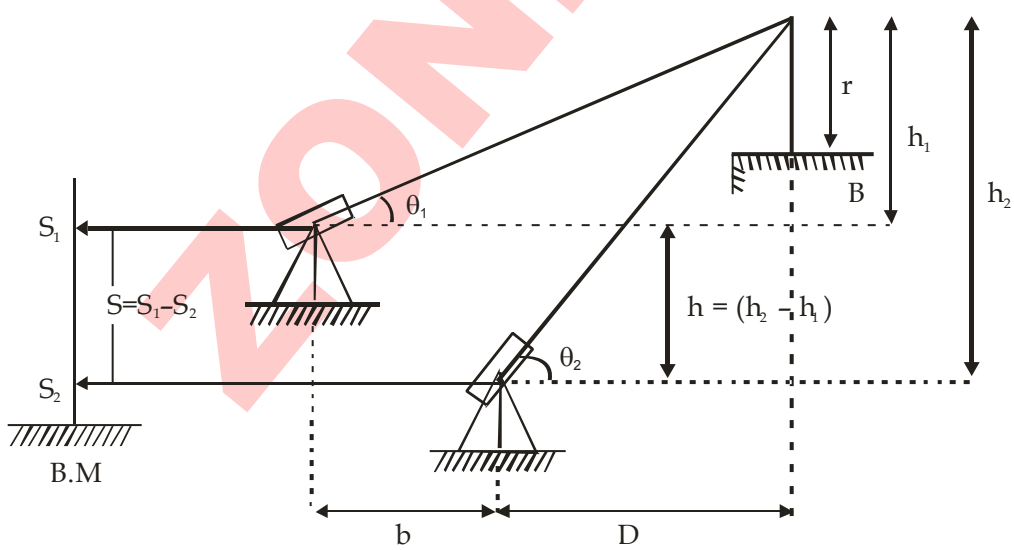

$$\frac{h_1}{b+D} = \tan\theta_1 \Rightarrow h_1 = (b + D)\tan\theta_1 \text{ ....}$$

$$\frac{h_2}{D} = \tan\theta_2 \Rightarrow h_2 = D\tan\theta_2 \text{ ....(2)}$$

from (2) & (1)

$(h_2 - h_1) = D \tan\theta_2 - (b + D) \tan\theta_1 = D \tan \theta_2 - b \tan \theta_1 - D \tan \theta_1$

$h = D (\tan\theta_2 - \tan\theta_1) - b \tan\theta_1$

$h = S$

$S = D (\tan\theta_2 - \tan\theta_1) - b \tan\theta_1$

$$\left[D = \frac{S + b\tan\theta_1}{\tan\theta_2 - \tan\theta_1}\right]$$

[R.L of B = R.L of B.M + S_2 + h_2 – r + C]

correction due to curvature and refraction ($C = -0.0673d^2$) in km

(3) The distance between instrument & base of station cannot be measured and both instrumet positions are not in same vertical plane with object.

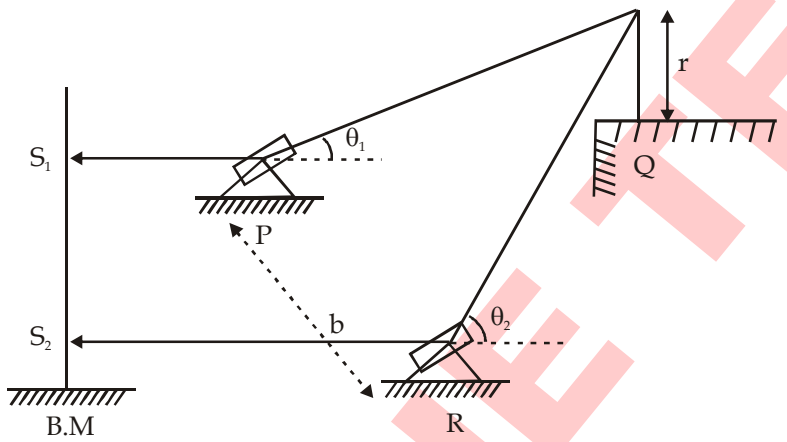

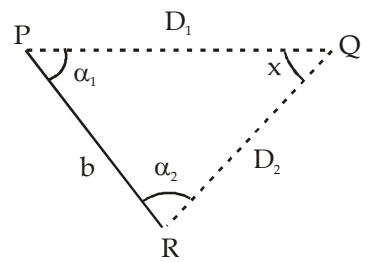

$\angle x = 180° - (\alpha_1 + \alpha_2)$

From line rule -

$$\frac{D_1}{\sin\alpha_2} = \frac{D_2}{\sin\alpha_1} = \frac{b}{\sin\left[180° - (\alpha_1 + \alpha_2)\right]}$$

$$D_1 = \frac{b\sin\alpha_2}{\sin(\alpha_1 + \alpha_2)} \ \& \ D_2 = \frac{b\sin\alpha_1}{\sin(\alpha_1 + \alpha_2)}$$

R.L of Q = R.L of B.M + S_1 + D tan θ_1 – r + C

or

= R.L of B.M + S_2 + $D_2 \tan\theta_2$ – r + C

ZONE TECH

CHAPTER - 10 (REMOTE SENSING & GIS)

What is Remote Sensing?

- The science of acquiring information about the earth using instruments which are remote to the earth's surface, usually from aircraft or satellites.
- Instruments may use visible light, infrared or radar to obtain data. Remote sensing offers the ability to observe and collect data for large areas relatively quickly, and is an important source of data for GIS.

Components in remote sensing

Sensors

Device that receives electromagnetic radiation and converts it into a signal that can be recorded and displayed as either numerical data or an image.

Platform

The vehicle which carries a sensor i.e. satellite, aircraft, balloon, etc.

One platform can carry more than one sensor. For example:-

Platform name	Sensor name
Landsat TM	Thematic Mapper (Passive: Optical sensor)
Landsat ETM	Enhanced Thematic Mapper (Passive: Optical sensor)
ALOS	PRISM (Passive: Optical sensor) AVNIR-2 (Passive: Optical sensor) PALSAR (Active: Microwave sensor)

Types of Remote Sensing:-

Passive Remote Sensing

Remote sensing of energy naturally reflected or radiated from the terrain.

Active Remote Sensing

Remote sensing methods that provide their own source of electromagnetic radiation to illuminate the terrain. Radar is one example.

Satellite Based Remote Sensing

Advantage:- Less geometric errors (platform is stable)

Disadvantage:- Need to wait a time for certain event fixed spatial resolution.

Aerial surveying

Advantage:- Acquire any times any events variable spatial resolution by changing flight altitude and camera focal length.

Disadvantage:- High geometric errors; require sophisticated geometric correction model, costly for specific area, specific purpose.

Ground Based remote sensing GBRS or Low Altitude Remote Sensing
Scientific experiment purposes (e.g. study about canopy, soil contamination, etc.)

Types and Uses of Satellites:-
- Type 1: Low Earth Orbits/Satellites: Normally used in spy satellite (Military purposes).
- Type 2: Sun-synchronous Orbits/Satellites: A polar orbit where the satellite always crosses the equator at the same local solar time. Most of the earth resources satellites are sun synchronous orbit.
- Type 3: Geostationary Orbits/Satellites: Satellites at very high altitudes, which view the same portion of the Earth's surface at all times. Especially used in metrological applications.

Properties of Electromagnetic Waves

Resolutions in Remote Sensing
- **Spatial Resolution:** The detail discernible in an image is dependent on the spatial resolution of the sensor and refers to the size of the smallest possible feature that can be detected.
- **Spectral Resolution:** Spectral resolution describes the ability of a sensor to define fine wavelength intervals.
- **Temporal Resolution:** Also important to consider in a remote sensing system, refers to the length of time it takes for a satellite to complete one entire orbit cycle.
- **Radiometric Resolution:** The radiometric resolution of an imaging system describes its ability to discriminate very slight differences in energy.

(a) Atmospheric correction
(b) Radiometric correction
(c) Geometric correction

Methods of Geometric correction
1. Using satellite header file (satellite onboard GPS)
2. Image to image registration
3. Image to map registration
4. Manually entered GCPs (Ground Control Points)

Remote Sensing Data Applications in GIS
1. Land Cover Classification
2. Urban Greenness (Eco-friendly Walk Score Calculator)
3. Monitoring of Deforestation Process
4. Surface Steepness Measurement
5. Viewshed Analysis and Resort Site Selection
6. Watershed and Environmental Impact Assessment

ZONE TECH

CHAPTER - 11 (FIELD ASTRONOMY)

Introduction

- Science deals with heavenly bodies such as Sun, Moon ,planets etc.
- Find absolute position of any point.
- Angular direction of the Sun and Star, relative to Horizon.
- Celestial sphere
- Motion of Celestial sphere
- Earth and its Motion

Purposes of Field Astronomy

- Determine absolute location/ position and direction of any line on the surface of the Earth.
- Astronomical observation to celestial bodies such as Moon, Sun, Star and planets.
- Used to find Angular position of Stars.
- Determination of Orientation.

DEFINITION OF ASTRONOMICAL TERMS

1. The celestial sphere

- The Imaginary sphere on which the stars appear to lie or to be studded is known as the Celestial sphere.
- The center of the Earth may be taken as the center of celestial sphere.

2. The Zenith and Nadir

- The Zenith (Z) is the point on the upper portion of the celestial sphere marked by plumb line, above the observer.
- The point on the celestial sphere immediately above the observer's station.
- The Nadir (Z')Is the point on the lower portion of the celestial sphere marked by plumb line, below the observer.
- The point on the celestial sphere vertically below the observer's station.

3. The celestial Horizon / True Horizon/ Geocentric Horizon

- It is the great circle traced upon the celestial sphere by the plane which is perpendicular to the Zenith-Nadir line and which passes through the center of the earth.

4. The Terrestrial Poles and Equator

The Terrestrial Poles:

- The Terrestrial Poles are the two points in which the Earth's axis of rotation meets the earth's sphere.

The Terrestrial Equator:

- The Terrestrial Equator is the great circle of the Earth, the plane of which is at right angles to the axis of rotation.

ZONE TECH

5. The Celestial Poles and Equator

The Celestial Poles:

- If the Earth's axis of rotation is produced indefinitely , it will meet the celestial sphere in two points called the North and South celestial poles.

The Celestial Equator:

- It is the Great circle of the celestial sphere in which it is intersected by the plane of celestial equator.

6. The Sensible Horizon:

- The circle in which a plane passing through the Earth's surface and point of observations and tangential to the earth's surface or (normal to the Zenith nadir line) intersects with celestial sphere is called as the sensible Horizon.
- The line of sight of an accurately levelled telescope lies in this plane.

7. The Visible Horizon:

- The circle of contact with the Earth surface of the visible rays passing through the point of observation is called as visible horizon.
- Visible Horizon is a small circle of Earth.

8. The Vertical Circle

- A vertical circle of the celestial sphere is a Great circle passing through the Zenith (Z) and Nadir (Z′).
- All the vertical circle cut the celestial Horizon at Right Angles.

9. The Observer's Meridian

- The Meridian of any Particular point is that circle which passes through the Zenith (Z) and Nadir (Z′) and the point as well as through the poles.

10. The Prime Vertical/ Prime Control

- It is Vertical Circle at 90R″ to observer's meridian on celestial sphere and passes through the East and West points of the horizon is called as prime vertical.

11. The Latitude & The Longitude

- The latitude of a point *P* on the surface is defined as the angle that a straight line, passing through both *P* and *C*, subtends with respect to the equatorial plane.
- The longitude of the place is the angle between a fixed reference meridian called the prime or first meridian and the meridian of the place.

14. The Altitude (á)

- The angular distance above Horizon as measured on the Vertical circle passing through the body is called as altitude.

15. The Co-altitude or zenith distance (z):

- It is the angular distance of heavenly body from the zenith.
- It is the compliment of the altitude i. e z= (90- ±).

ZONE TECH

16. The Azimuth (A)

- The azimuth of a heavenly body is the angle between the observer's meridian and the vertical circle passing through the heavenly body.

17. The Declination (ä)

- The declination of a celestial body is angular distance from the plane of the equator, measured along the star's meridian generally called the declination circle. (i.e great circle passing through the heavenly body and the celestial pole)
- Declination varies from 0 to 90, and is marked + or – according as the body is north or south of the equator.

19. Hour circle

- Hour circle are great circle passing through the North and South celestial poles.
- The declination circle of a heavenly body is thus its hour circle.

20. The Hour Angle:

- The Hour Angle of a heavenly body is the angle between the observer's meridian and the declination circle passing through the body.
- The Hour angle is always measured westward.

21. The Right Ascension (R.A.):

- It is the equatorial angular distance measured eastward from the first point of Aries to the hour circle through the heavenly body.

22. The Equinoctial Points:

- The points of the intersection of the ecliptic with the equator are called the equinoctial points.
- The declination of the sun is zero at the equinoctial points.
- The Vernal Equinox or the first point of Aries is the point in which sun's declination changes from South to North , and marks commencement of spring.
- The Autumnal Equinox or the first point of Libra is the point in which Sun's declination changes from North to South, and marks the commencement of autumn.

23. The Ecliptic: (Road of The Sun)

- The Ecliptic is the Great circle of the heavens which the sun appears to describe on the celestial sphere with Earth as a centre in the course of the year.
- The plane of the ecliptic is inclined to the plane of the equator at an angle of about 23° 27′ .

24. The Solastices:

- Solastices are the points at which the North and South declination of the Sun is maximum.
- The point C at which North declination of the Sun is maximum is called Summer solastice
- The point C′ at which South declination of the Sun is maximum is known as winter solastice.

ZONE TECH

25. The Celestial Meridian:

- The Great Circle passing through the poles, the zenith and the nadir is called as celestial meridian.
- Celestial Meridian cuts the Horizon and Equator at Right angle.

Methods for determination of Azimuth of survey line

1. Making observation on circumpolar star at transit.
2. By observation on circum polar star at elongation.
3. By making observation on star at equal altitudes.
4. By taking observation on Polaris.
5. By taking the ex- meridian altitude of the stars.
6. By hour angle of the star or sun.

ZONE TECH