Booklet - 11

ZONE TECH

Best Institute For Assistant & Junior Engineer

RPSC-AEn Mains

Work Book Solution

for

FM

iOS

Google Play

Visit Our Website

www.zonetech.in

DOWNLOAD NOW

https://zonetech.in/downloads

PART - A

2 Marks Questions

Q.1

Sol. The concept of continuum in fluid mechanics assumes that fluids are continuous and homogeneous, allowing properties like density and pressure to vary smoothly. This is essential for the macroscopic approach, as it enables the use of mathematical models to analyze fluid behavior without considering molecular details.

Q.2

Sol. **Specific Gravity (SG):** It is the ratio of the density of a substance to the density of a standard substance (usually water). It is a dimensionless value.

Relation to Density:

$$SG = \frac{\text{Density of the substance}}{\text{Density of standard substance}}$$

Hence, density of the substance can be calculated as:

$$\text{Density} = SG \times \text{Density of standard substance (water)}.$$

Q.3

Sol. As we know that, 1 Liter = 10^{-3} m^3

$$\text{Specific weight (w)} = \frac{\text{Weight}}{\text{Volume}} = \frac{9.6}{10^{-3}} = 9600\,\frac{N}{m^3}$$

$$\text{Specific weight (w)} = \rho g$$

$$\therefore \quad \text{Density } (\rho) \text{ of crude oil} = \frac{9600}{9.81} = 978.59\,\frac{kg}{m^3}$$

$$\text{Specific gravity of crude oil} = \frac{\text{Density of oil}}{\text{Density of standard fluid i.e. water}} = \frac{978.59}{1000} = 0.978$$

Q.4.

Sol. **Newton's Law of Viscosity:**

It has been experimentally verify that the shear stress on a layer at a distance y from the surface is directly proportional to the rate of shear strain or the rate of angular deformation.

$$\tau = \mu\frac{du}{dy} = \mu\frac{d\theta}{dt}$$

Where:

τ = Shear stress

μ = Dynamic viscosity

$\frac{dy}{dy}$ = Velocity gradient

Examples of Applications:

1. **Lubrication systems:** Oil viscosity determines engine performance.
2. **Fluid transportation:** Design of pipelines for water, oil, or gases.

ZONE TECH

Q.5

Sol. According to Newton's law viscosity $\tau = \mu \frac{du}{dy}$

where μ is the constant of proportionality and is known as the co-efficient of dynamic viscosity or only viscosity. $\frac{du}{dy}$ represents the rate of shear strain or rate of shear deformation or velocity gradient.

SI unit of dynamic viscosity $= \frac{\text{Newton} - \text{sec}}{m^2} = \frac{N-s}{m^2}$

Dimension of dynamic viscosity $= M^1L^{-1}T^{-1}$

Kinematic Viscosity : It is defined as the ratio between the dynamic viscosity and density of fluid. It is denoted by the symbol (υ). Thus, mathematically,

$$\upsilon = \frac{\text{Viscosity}}{\text{Density}} = \frac{\mu}{\rho}$$

In MKS and SI, the unit of kinematic viscosity is m^2/sec.

Dimension of kinematic viscosity $= M^0L^2T^{-1}$

Q.6

Sol.
- Kinematic viscosity depends on both dynamic viscosity and density. Air has much lower density than water, which significantly increases its kinematic viscosity.
- Kinematic viscosity of air is 15.2 times that of water at 20°C.

Q.7

Sol. Given :

Distance between plates, $dy = 1.25 \text{ cm} = 0.0125 \text{ m}$

Viscosity, $\mu = 14 \text{ poise} = \frac{14}{10} N\text{-}s/m^2$

Velocity of upper plate, $u = 2.5$ m/sec.

Shear stress is given by equation as, $\tau = \mu \frac{du}{dy}$

Where du = Change of velocity between plates $= u - 0 = u = 2.5$ m/sec.

$dy = 0.0125$ m.

$\therefore \quad \tau = \frac{14}{10} \times \frac{2.5}{0.0125} = 280 \text{ N/m}^2.$

Q.8

Sol. Surface tension causes the liquid drop to take a spherical shape because a sphere has the least surface area for a given volume, minimizing surface energy.

Q.9

Sol. Given :

Surface tension, $\sigma = 0.0725$ N/m

Pressure intensity, $p = 0.02 \text{ N/cm}^2 = 0.02 \times 10^4 \frac{N}{m^2}$

Let d = diameter of the droplet

Using equation, we get $p = \frac{4\sigma}{d}$ or $0.02 \times 10^4 = \frac{4 \times 0.0725}{d}$

$$d = \frac{4 \times 0.0725}{0.02 \times (10)^4} = 0.00145 \text{ m} = 0.00145 \times 1000 = 1.45 \text{ mm}.$$

Q.10

Sol. When a tube having a very very small diameter (capillary tubes) inserted in a large reservoir of liquid then the liquid will start to rise or fall in the tubes this effect is known as capillary effect or capillarity.

Cause of capillary effect is adhesion and cohesion both.

It is affected by the contact angle, which represents the angle between a liquid/vapor interface and a solid surface. The smaller the contact angle, the stronger the capillary action.

Q.11

Sol. The angle of contact, θ between water and glass is 0°; $\cos\theta = 1$.

Given, $\sigma = 0.075$ g/cm

$$= 0.075\frac{g}{cm} = 0.075\times\frac{10^{-3}}{10^{-2}}\frac{kg}{m} = 0.075\times\frac{10^{-3}}{10^{-2}}\times 9.81\frac{N}{m}$$

$$= 0.0736 \text{ N/m} \simeq 0.074 \text{ N/m}$$

& $d = 2\text{mm} = 0.002\text{m}$

$$\therefore \quad h = \frac{4\sigma\cos\theta}{\rho g d} = \frac{4\times 0.074\times 1}{1000\times 9.81\times 0.002} = 0.015\text{m} = 1.5 \text{ cm}$$

Q.12

Sol. **Pressure intensity**

The force exerted on a unit area. The formula for pressure is p = (F/A), where F is the total force and A is the area.

Pressure head

The ratio of pressure intensity at a point to the specific weight of the fluid at that point. It can also be defined as the height of a liquid column that corresponds to a particular pressure. Pressure head is also known as static pressure head or static head.

$$h = \frac{P}{\rho g}$$

Where:

h is the pressure head (in meters)

P is the pressure (in Pascal's, Pa)

ρ is the density of the fluid (in kg/m^3)

g is the acceleration due to gravity (approximately 9.81 m/s^2)

Q.13

Sol. **Total Pressure:** Total pressure is the force exerted by static fluid on a surface when it is contact with the fluid.

Centre of Pressure: It is the point through which total hydrostatic force is supposed to be acting.

Q.14

Sol. For static incompressible fluid the pressure increase linearly with depth and decrease linearly with height but for compressible fluid pressure varies exponentially.

Q.15

Sol.
- **Centroid:** The geometric center of an object, based only on its shape.
- **Center of Gravity:** The point where the total weight of an object acts, considering mass distribution and gravity.

In a uniform object, the centroid and center of gravity coincide at the same point.

Q.16

Sol. **Archimede's Principle:-**

When a body submerged or immersed (fully or partially) inside the fluid then the fluid will exert a force in the vertical upward direction is known as upthrust or buoyancy force and the magnitude of this force is equal to the weight of the liquid displaced.

ZONE TECH

Q.17

Sol. **Stable Equilibrium:-** When body is displaced from original position and it is tends to come back to its original position.

Neutral Equilibrium:- When body is displaced from its original position it remains in that new position.

Unstable Equilibrium:- When a body is displaced from its original position it continues to move away.

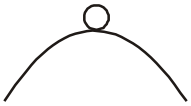

Q.18

Sol. **Metacenter (M):-** It is the point on vertical axis of the body at which the line of action of buoyancy force cuts the vertical axis of the body.

Metacentric Height (GM):-

It is the height of metacenter above the center of gravity.

$$GM = BM - BG$$

$$GM = \frac{I}{V_{Displaced}} - BG$$

Where I = MOI of the surface of body cutted by the free surface of fluid.

Q.19

Sol. **Laminar Flow:**

- Fluid particles move in parallel layers without mixing.
- Occurs at Reynolds number (Re) < 2000.
- Velocity distribution is parabolic.

Turbulent Flow:

- Fluid particles move in a disorderly and irregular manner.
- Occurs at Reynolds number (Re) > 4000.
- Velocity distribution is flatter due to mixing.

Q.20

Sol. **1-D Flow:** When fluid properties varies in only 1– direction, i.e. in x or y or z, then the flow is 1-D flow.

2-D Flow: When fluid properties vary in 2-directions, i.e. in xy or yz or zx, then the flow is 2-D dimensional.

3-D Flow: When fluid properties vary in all 3-directions (x, y and z), then the flow is 3-D dimensional flow.

Note: Flow can never be one dimensional because of viscosity. Flow of fluid through a pipe can be approximated as 1-D flow. If average velocities are taken into consideration.

Q.21

Sol. The equation based on the principle of conservation of mass is called continuity equation.

Mathematically $\rho AV = \text{Constant}$

It is only equation which indicates the flow is possible or not.

ZONE TECH

Q.22

Sol. **Stream Line:-**

It is imaginary curve drawn in a flowing fluid such that tangent drawn at any point on this line directly represents the direction of the velocity vector of the fluid particle at that point.

It indicates Fluid speed, Flow direction, Resistance.

Q.23

Sol. Circulation = vorticity × area

Circulation represents strength of vorticity in a particular area.

Q.24.

Sol. It is defined as a scalar function of space and time such that its partial derivative with respect to any direction gives the component of velocity at right angle to this direction (counter clock wise direction taken as positive).

$$\psi = f(x, y, t)$$

$$\frac{\partial \psi}{\partial x} = v$$

$$\frac{\partial \psi}{\partial y} = -u$$

Q.25

Sol. Vena Contracta is the point where a fluid stream, after passing through an orifice or nozzle, contracts to its smallest diameter. It occurs because the fluid accelerates through the opening, and the flow narrows downstream, with the highest velocity and lowest pressure at this point.

Q.26

Sol. The following are the assumptions made in the derivation of Bernoulli's equation.

- The flow is ideal, i.e., viscous force is zero
- The flow is steady
- The flow is incompressible
- The flow is irrotational
- The flow is in stream line

Q.27

Sol. **Bernoulli Theorem:-** It states that in a steady, ideal flow of an incompressible fluid the total energy at any point of the fluid is constant. The total energy consists of pressure energy, kinetic energy and potential energy or datum energy.

Note:- Bernoulli's equation is based on conservation of energy.

Q.28

Sol. Given :

Stagnation pressure head, $h_s = 6m$

Static pressure head, $h_t = 5\ m$

$\therefore$ $h = 6 - 5 = 1\ m$

Velocity of flow, $V = C_v\sqrt{2gh} = 0.98\sqrt{2 \times 9.81 \times 1} = 4.34 m/s$

Q.29

Sol. A grid obtained by drawing series of equipotential lines and stream lines is called a flow net. The flow net is an important tool in analysing two-dimensional irrotational flow problems.

Q.30

Sol. Hydraulic diameter is a parameter used to characterize the flow of fluids through pipes, ducts, and channels. It is defined as four times the ratio of the cross-sectional area to the wetted perimeter of the conduit.

$$\text{For circular body } = \frac{4A}{P} = \frac{4 \times \frac{\pi}{4} D^2}{\pi D} = D$$

Yes it is equal to for a circular pipe of diameter D

Q.31

Sol. Pipes are connected in parallel to each other to increase the discharge at the same pressure.

Q.32

Sol. This is defined as the pipe of uniform diameter having loss of head and discharge equal to the loss of head and discharge of a compound pipe consisting of several pipes of different lengths and diameters. The uniform diameter of the equivalent pipe is called equivalent size of the pipe.

Q.33

Sol. Hydraulic grade line is the line joining the point representing the value of piezometric head at the various cross section of pipe in pipe flow whereas Energy grade line is a line joining the point representing the value of total head at various cross section of pipe in pipe flow.

For stationary bodies such as reservoirs or lakes, the EGL and HGL coincide with surface of the liquid.

Q.34

Sol. The sum of the static and dynamic pressures is called the stagnation pressure, and it is expressed as

$$P_{stag} = P + \rho\frac{V^2}{2}(kPa)$$

When static and stagnation pressures are measured at a specified location, the fluid velocity at that location is calculated from

$$V = \sqrt{\frac{2(P_{stag} - P)}{\rho}}$$

Q.35

Sol. **Rayleigh's Method:-**

This method is used for determining the expression for a variable which depends upon maximum three or four variables only.

Let X is a variable, which depends on X_1, X_2 and X_3 variables. Then according to Rayleigh's method,

$$X = f^n(X_1, X_2, X_3 \ldots X_n) \quad \ldots(i)$$

or

$$X = K\left[X_1^a, X_2^b \ldots X_n^n\right] \quad \ldots(ii)$$

K = constant and a, b & c are arbitrary powers

a, b, c,.....n can be determined by fourier principle of dimensional homogenity.

Q.36

Sol. Given :

Discharge over model, $Q_m = 2\ m^3/s$

Velocity over model, $V_m = 1.5\ m/s$

Linear scale ratio, $L_r = 36.$

For dynamic similarity, Froude model law is used. Using equation, we have

$$\frac{V_P}{V_m} = \sqrt{L_r} = \sqrt{36} = 6.0$$

$\therefore$ V_P = Velocity over prototype = $V_m \times 6.0 = 1.5 \times 6.0 = 9\ m/s.$

For discharge, using equation, we get

$$\frac{Q_P}{Q_m} = L_r^{2.5} = (36)^{2.5}$$

$$\therefore \quad Q_P = Q_m \times (36)^{2.5} = 2 \times 36^{2.5} = 15552\ m^3/s.$$

Q.37

Sol. Kinetic energy correction factor is defined as the ratio of the kinetic energy of the flow per second based on actual velocity across a section to the kinetic energy of the flow per second based on average velocity across the same section.

For laminar and turbulent flow kinetic energy correction factor is 2.0 and 1.33 respectively.

Q.38

Sol. **Drag :-** The component of the total force (F_R) in the direction of motion is called 'drag'. This component is denoted by F_D.

Lift :- The component of the total force (F_R) in the direction perpendicular to the direction of motion is known as 'lift'. This is denoted by F_L.

Q.39

Sol. It is defined as the distance, measured perpendicular to the boundary of the solid body, by which the boundary should be displaced to compensate for the reduction in flow rate on account of boundary layer formation. It is denoted by δ^*.

$$\delta^* = \int_0^\delta \left(1 - \frac{u}{U}\right) dy$$

Q.40

Sol. Given :

Velocity distribution $\frac{u}{U} = \frac{y}{\delta}$

Displacement thickness δ^* is given by equation

$$\delta^* = \int_0^\delta \left(1 - \frac{u}{U}\right) dy = \int_0^\delta \left(1 - \frac{y}{\delta}\right) dy$$

$$= \left[y - \frac{y^2}{2\delta}\right]_0^\delta \qquad [\delta \text{ is constant across a section}]$$

$$= \delta - \frac{\delta^2}{2\delta} = \delta - \frac{\delta}{2} = \frac{\delta}{2}.$$

PART - B

5 Marks Questions

Q.41

Sol. **Newtonian Fluid :** A real fluid, in which the shear stress is directly proportional to the rate of shear strain (or velocity gradient), is known as a Newtonian fluid.

Examples :- Water, oil, Air

Non-Newtonian Fluid : A real fluid, in which the shear stress is not proportional to the rate of shear strain (or velocity gradient), known as a Non-Newtonian fluid.

Non-Newtonian fluids can be classified as deformation dependent and time dependent fluids. Deformation dependent Non-Newtonian fluids are

- Pseudo plastic or shear thinning fluid
  Example : Milk, Blood
- Dilatant or shear thickening fluid
  Example : Saturated solution of sugar, Honey, Rise solution, Starch solution
- Bingham plastic or ideal plastic fluid
  Example : Tooth-paste, Creams, Gel

Time dependent Non-Newtonian fluids are

- Thixotropic fluid
  Example : Ink, Paints
- Rheopectic fluid
  Example : Gypsum paste

Non-Newtonian fluids follow the power law

$$\tau = A\left(\frac{du}{dy}\right)^n + B$$

$$\tau = A\left(\frac{du}{dy}\right)^{n-1}\frac{du}{dy} + B$$

Where, $A\left(\frac{du}{dy}\right)^{n-1}$ = Apparent viscosity

& A = Consistency index

n = Flow behaviour index

B = Initial yield stress

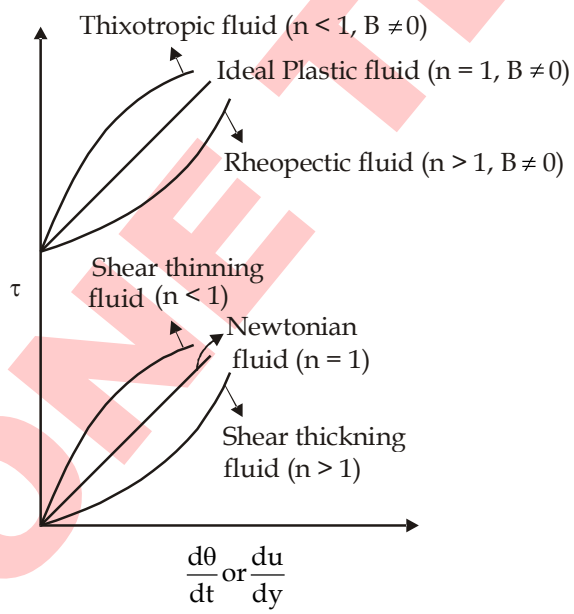

Q.42

Sol. **Variation of dynamic viscosity with temperature :**

Temperature affects the viscosity. The viscosity of liquids decreases with the increase of temperature while the viscosity of gases increases with the increase of temperature. This is due to reason that the viscous forces in a fluid are due to the cohesive forces and molecular momentum transfer.

In liquids, the cohesive forces predominates the molecular momentum transfer, due to closely packed molecules and with the increase in temperature, the cohesive forces decreases with the result of decreasing viscosity. But in case of gases the cohesive forces are small and molecular momentum transfer predominates. With the increase in temperature, molecular momentum transfer predominates. With the increase in temperature, molecular momentum transfer increases and hence viscosity increases.

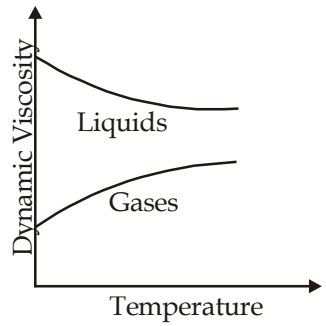

Variation of Dynamic Viscosity with Temperature

Variation of kinematic viscosity with temperature :

Temperature affect the kinematic viscosity. The kinematic viscosity of liquid decrease with increase of temperature while the kinematic viscosity of gases increase at very high rate with increase of the temperature.

Q.43

Sol. Classification of fluids on the Basis of density and viscosity:

Type of Fluid	Density	Viscosity
1. Ideal Fluid	Constant	Zero
2. Incompressible Fluid	Constant	Non – Zero
3. Inviscid Fluid	Constant or Variable	Zero
4. Real Fluid	Variable	Non – Zero
5. Newtonian Fluid	Constant or Variable	$\tau = \mu \frac{du}{dy}$
6. Non-Newtonian Fluid	Constant or Variable	$\tau \neq \mu \frac{du}{dy}$
7. Compressible fluid	Variable	Non – Zero
8. Perfect Gas	$P = \rho RT$; Variable	Zero

Q.44

Sol. Given: $u = \frac{2}{3}y - y^2$

$\therefore$ $\frac{du}{dy} = \frac{2}{3} - 2y$

$$\left(\frac{du}{dy}\right)_{at\ y=0} \text{ or } \left(\frac{du}{dy}\right)_{y=0} = \frac{2}{3} - 2(0) = \frac{2}{3} = 0.667$$

Also $$\left(\frac{du}{dy}\right)_{at\ y=0.15} \text{ or } \left(\frac{du}{dy}\right)_{y=0.15} = \frac{2}{3} - 2\times 0.15 = 0.667 - 0.30 = 0.367\,s^{-1}$$

$$\text{Value of } \mu = 8.63 \text{ poise } = \frac{8.63}{10}\ Ns/m^2 = 0.863\ Ns/m^2$$

Now shear stress is given as, $\tau = \mu\dfrac{du}{dy}$.

(i) Shear stress at y = 0 is given by

$$\tau_0 = \mu\left(\frac{du}{dy}\right)_{y=0} = 0.863 \times 0.667 = \mathbf{0.5756\ N/m^2}.$$

(ii) Shear stress at y = 0.15 m is given by

$$(\tau)_{y=0.15} = \mu\left(\frac{du}{dy}\right)_{y=0.15} = 0.863 \times 0.367 = \mathbf{0.3167\ N/m^2}.$$

Q.45

Sol. Shear stress is given as

$$\tau = \mu\left(\frac{dv}{dy}\right)$$

Where $\tau = 0.216\,N/m^2$; $\left(\dfrac{dv}{dy}\right) = 0.216 s^{-1}$

By substitution, we get

$$0.216 = \mu\ (0.216)$$

$$\mu = 1$$

$\therefore$ Kinematic viscosity

$$\nu = \frac{\mu}{\rho} = \frac{1}{959.42} = 1.042\times 10^{-3}\,m^2/s$$

Q.46

Assume the surface tension of water as 0.073 N/m and the atmospheric pressure as 101300 N/m²

Sol. Assuming the droplet to be spherical and the jet to be cylindrical,

For the droplet	For the jet
$P_{gauge} = \frac{4\sigma}{d} = \frac{4\times 0.073}{0.004}$	$P_{gauge} = \frac{2\sigma}{d} = \frac{2\times 0.073}{0.004}$
$= 73\ N/m^2$	$= 36.5\ N/m^2$
$P_{abs} = 101300 + 73$	$P_{abs} = 101300 + 36.5$
$= 101373\ N/m^2$	$= 101\,336.5\ N/m^2$
$= 101.373\ kN/m^2$	$= 101.34\ kN/m^2$

Q.47

Sol. **(1) Absolute pressure:-**

- It is the net pressure above zero pressure level.
- It is measured using Aneroid barometer.

(2) Gauge Pressure:-

- It is the value of pressure above atmospheric pressure.
- It is measured using manometer or Bourden gauge.

(3) Vaccum pressure:-

- ` It is the value of the pressure below atmospheric pressure.

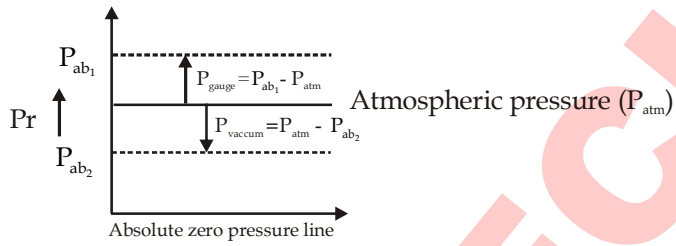

$$P_{abs} = P_{gauge} + P_{atm}$$
$$P_{vaccum} = P_{atm} - P_{abs}$$

(-ve) P_{vaccum} is called negative pressure.

Q.48

Sol. Let us consider a differential element of a static fluid as shown in the figure below.

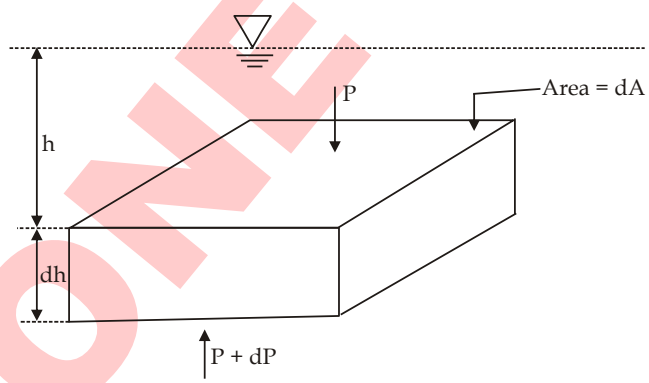

Let us assume the pressure at the top of the element is P. With increase in depth by dh, the pressure changes to P + dP.

For equilibrium of vertical forces acting on the element, we have

$$(P)\, dA + W - (P + dP)\, dA = 0$$

where W $\rightarrow$ weight of liquid in volume dA × dh

$$\Rightarrow \quad dPdA = \gamma dA.dh$$

$$\Rightarrow \quad \frac{dP}{dh} = \gamma$$

The above relation shows that the hydrostatic pressure varies only with depth.

Therefore, in a horizontal plane, depth would be same at all points and hence hydrostatic pressure will be same.

Q.49

Sol. Given :

Height of water, $Z_1 = 2$ m

Height of oil, $Z_2 = 1$ m

Sp. gr. of oil, $S_0 = 0.9$

Density of water, $\rho_1 = 1000\ kg/m^3$

Density of oil, ρ_2 = Sp. gr. of oil × Density of water

Pressure intensity at any point is given by

$$p = \rho \times g \times Z$$

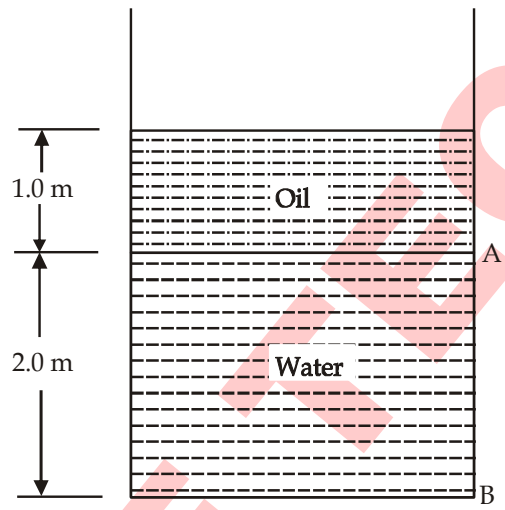

(i) At interface, i.e., at A

$$p = \rho_2 \times g \times 1.0$$

$$= 8829 \frac{N}{m^2} = \frac{8829}{10^4} = 0.8829\ N/cm^2.$$

(ii) At the bottom, i.e., at B

$$p = \rho_2 \times gZ_2 + \rho_1 \times g \times Z_1 = 900 \times 9.81 \times 1.0 + 1000 \times 9.81 \times 2.0$$

$$= 8829 + 19620 = 28449\ N/m^2 = \frac{28449}{10^4} N/cm^2 = 2.8449\ N/cm^2.$$

Q.50

Sol. Given:

Pressure intensity, $p = 3.924 \frac{N}{cm^2} = 3.924 \times 10^4 \frac{N}{m^2}$

The corresponding height, Z, of the fluid is given by equation as follows :

$$Z = \frac{p}{\rho \times g}$$

(a) For water, $\rho = 1000\ kg/m^3$

$$\therefore \quad Z = \frac{p}{\rho \times g} = \frac{3.924 \times 10^4}{1000 \times 9.81} = 4 \text{ m of water}$$

(b) For oil, sp. gr. $= 0.9$

$\therefore$ Density of oil $\rho_0 = 0.9 \times 1000 = 900 \text{ kg/m}^3$

$$\therefore \quad Z = \frac{\rho}{\rho_0 \times g} = \frac{3.924 \times 10^4}{900 \times 9.81} = 4.44 \text{ m of oil}$$

Q.51

Sol. As we know that the location of total pressure force from the surface is

$$\bar{h}_{cp} = \frac{I_{GXX} \times \sin^2\theta}{\bar{h}A} + \bar{h} \quad \text{...(i)}$$

Where $\bar{h}_{cp}$ = center pressure from the free surface of liquid

$\bar{h}$ = center of gravity (centroid) of body from free surface of liquid

From equation (i), $\frac{\bar{I}_{Gxx} \times \sin^2\theta}{\bar{h}A}$ is always positive, therefore $\bar{h}_{CP}$ always greater than $\bar{h}$, this physcially mean that center of pressure (C_P) is always located below centroid (G).

Q.52

Sol. **Manometer :-** Manometers are defined as the devices used for measuring the pressure at a point in a fluid by balancing the column of fluid by the same or another column of the fluid.

- Manometer are used for the measurement of low, medium and high gauge pressure as well as vacuum pressure for liquid and gas both.
- In manometer we uses an additional fluid known as manometric fluid.
- Manometer are worked on the liquid column balance principle.
- Manometric fluid has low surface tension

Types of manometer

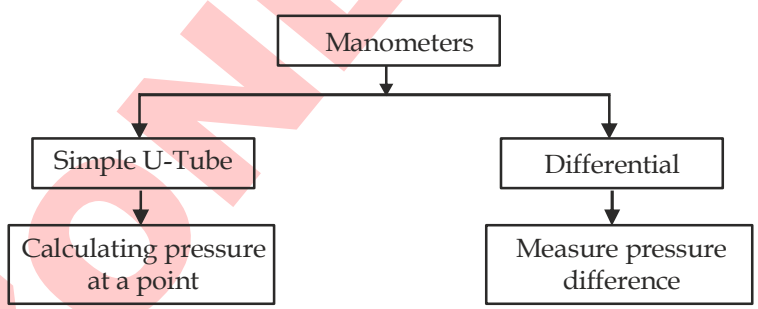

Q.53

Sol. The total pressure on one face of the plate is given by

$$P = wA\bar{x}$$

$$w = 9810 \text{ N/m}^3;$$

$$A = \frac{\pi}{4}(2.5)^2 = 4.909 \text{ m}^2; \text{ and}$$

$$\bar{x} = \left(1 + \frac{2}{2}\right) = 2\text{m}$$

$$\therefore \quad p = (9810 \times 4.909 \times 2)$$

$$= 96315 \text{ N} = 96.315 \text{ kN}$$

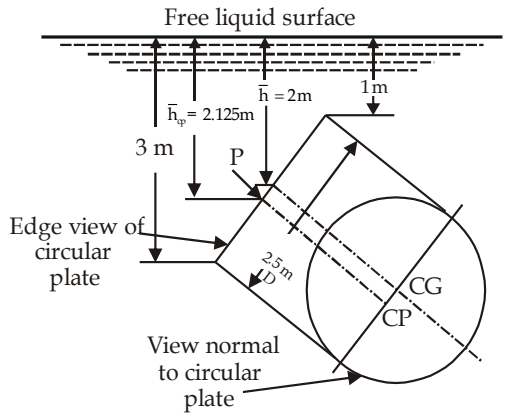

The depth of the centre of pressure is given by

$$\bar{h} = \bar{x} + \frac{I_G \sin^2\theta}{A\bar{x}}$$

$$I_G = \frac{\pi}{64}(2.5)^4 = 1.917\ m^4;\ \sin\theta = \frac{2}{2.5} = 0.8$$

$$\bar{h} = 2 + \frac{(1.917)\times(0.8)^2}{(4.909\times 2)} = 2.125\ m.$$

Q.54

Sol. The stability of a floating body refers to its ability to return to its original position after being tilted or disturbed. A stable floating body resists capsizing and maintains equilibrium when subjected to external forces.

Metacentric Height (GM)

The metacentric height is the vertical distance between the center of gravity (G) and the metacenter (M). It is a key factor in determining the stability of a floating body.

- **Center of Gravity (G):** The point through which the weight of the body acts.
- **Metacenter (M):** The point where the buoyant force acts when the body is tilted by a small angle.

Conditions for Stability

1. **Stable Equilibrium (GM > 0):**
   If the metacenter (M) is above the center of gravity (G), the body remains stable.
2. **Unstable Equilibrium (GM < 0):**
   If the metacenter (M) is below the center of gravity (G), the body becomes unstable and may capsize.
3. **Neutral Equilibrium (GM = 0):**
   If the metacenter coincides with the center of gravity, the body remains neutrally stable.

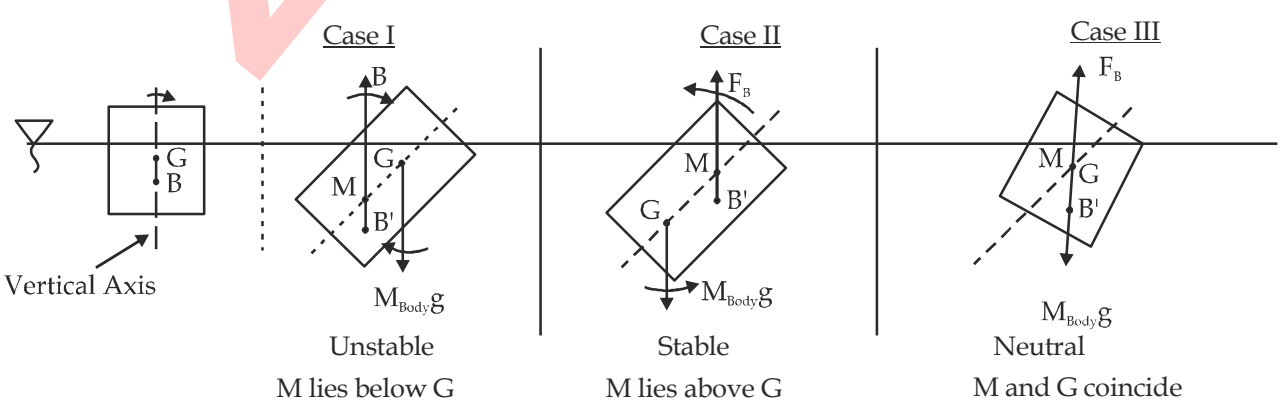

- Stable equilibrium (M above G)
- Unstable equilibrium (M below G)
- Neutral equilibrium (M coinciding with G)

Q.55

Sol.

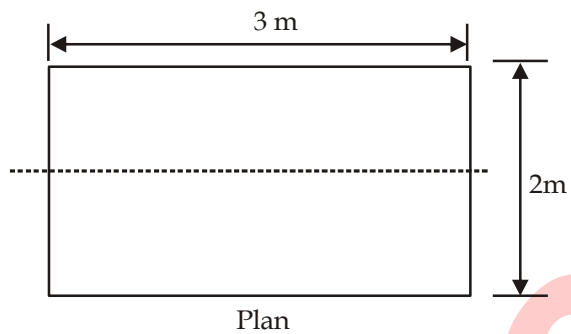

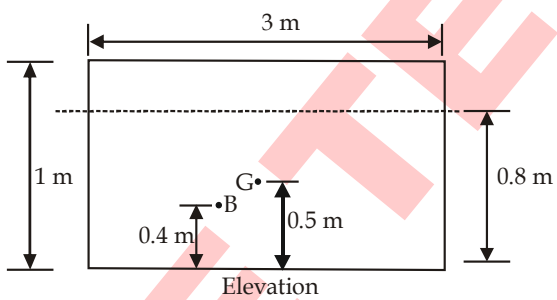

1. Weight of the body = w,

   For floating condition

$$\text{Weight of body} = \text{Buoyancy force}$$

$$w = \rho g\,(3 \times 2 \times 0.8)$$

$$w = 1000 \times 9.81 \times (3 \times 2 \times 0.8)$$

$$w = 4708\ \text{N}$$

2. Metacentric height,

$$GM = BM - BG$$

$$GM = \frac{I}{V_{disp}} - BG$$

$\because$

$$I = \frac{3(2)^3}{12} = 2m^4$$

$$V_{disp} = 0.8 \times 2 \times 3 = 4.8m^3$$

$$BG = (0.5 - 0.4) = 0.1m$$

$$GM = \frac{2}{4.8} - 0.1 \Rightarrow GM = 0.316m$$

Q.56

Sol. **Steady and Unsteady flow :-** If properties of fluid are not change with respect to time at a particular space that the flow is considered as steady flow. Otherwise, flow is unsteady.

Mathematically

Steady flow:-

$$\left.\frac{\delta F}{\delta t}\right|_{space} = 0 \quad \Rightarrow \quad \frac{\delta P}{\delta t} = 0$$

$$\frac{\delta V}{\delta t} = 0$$

$$\frac{\delta \rho}{\delta t} = 0$$

Unsteady flow:-

$$\left.\frac{\delta F}{\delta t}\right|_{space} \neq 0$$

2. **Uniform and Non-uniform flow :-** If properties of fluid are not change with respect to space at a particular time then the flow is considered as uniform flow. Otherwise, flow is non-uniform.

Mathematically

Uniform

$$\left.\frac{\delta F}{\delta s}\right|_{time} = 0$$

Non-uniform

$$\left.\frac{\delta F}{\delta s}\right|_{time} \neq 0$$

3. **Rotational and Irrotational flow :-**

- When fluid particles rotate about their center of mass during movement. Flow is said to be rotational, otherwise irrotational.

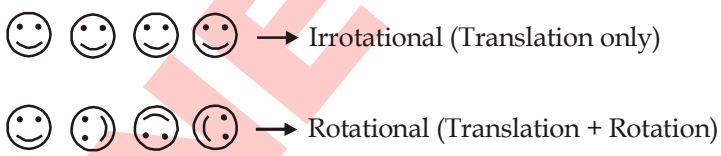

Q.57

Sol. **Streamline:-**

It is imaginary curve drawn in a flowing fluid such that tangent drawn at any point on this line directly represents the direction of the velocity vector of the fluid particle at that point.

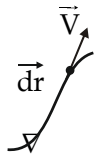

Pathline:-

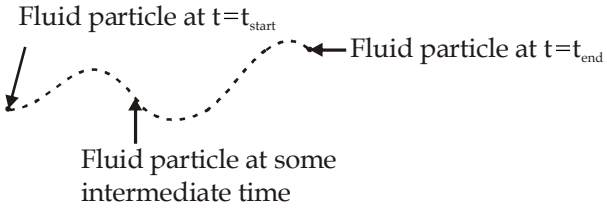

- It is the line traced by a single fluid particle as it move through space over a period of time.
- A pathline can intersect itself at different times.

Streakline or filament line:-

- It is the locus of different fluid particles passing through the fixed point.
- It is used for tracing the movement of gases.

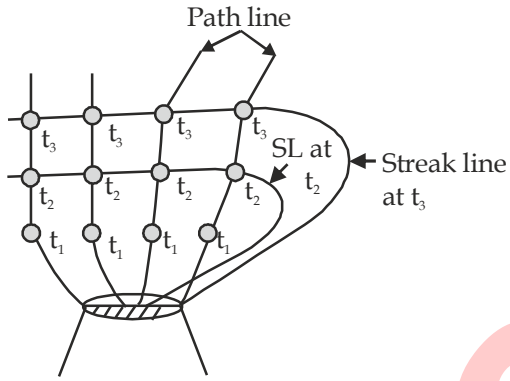

Q.58

Sol. A stream function ψ represents an irrotational flow if

$$\frac{\partial^2\psi}{\partial x^2}+\frac{\partial^2\psi}{\partial y^2}=0$$

By substitution, we get

$$\left[\frac{\partial^2}{\partial x^2}(2xy)+\frac{\partial^2}{\partial y^2}(2xy)\right]=0$$

Hence it represents an irrotational flow.

Now,
$$\frac{\partial\phi}{\partial x}=\frac{\partial\psi}{\partial y}=\frac{\partial}{\partial y}(2xy)=2x \quad \text{... (i)}$$

$$\frac{\partial\phi}{\partial y}=-\frac{\partial\psi}{\partial x}=-\frac{\partial}{\partial x}(2xy)=-2y \quad \text{... (ii)}$$

Integrating Eq. (i), we get

$$\phi=x^2+f(y)$$

&
$$\frac{\partial\phi}{\partial y}=f'(y) \quad \text{... (iii)}$$

Equating the values of $\left(\frac{\partial\phi}{\partial y}\right)$ from Eqs (ii) and (iii), we get

$$f'(y)=-2y$$

Integrating both the sides of the above expression, we get

$$f(y)=-y^2+C$$

where C is the constant of integration.

Therefore

$$\phi=x^2-y^2+C$$

Q.59

Sol. In the fluid flow various forces acting are

(a) Gravity Force $(\vec{F_g})$

(b) Pressure Force $(\vec{F_p})$

(c) Viscous Force $(\vec{F_v})$

(d) Force due to compressibility $(\vec{F_c})$

(e) Force due to turbulence $(\vec{F_t})$

(f) Minor forces like surface tension $(\vec{F_\sigma})$

For the Euler's equation of motion only gravity and pressure force are considered

$$\vec{F_g} + \vec{F_p} = M\vec{a}$$

Q.60

Sol. According to Bernoulli's theorem the sum of pressure energy, potential energy and kinetic energy per unit mass is constant at all cross-section in the streamline flow of an ideal liquid i.e.

$P + \frac{1}{2}\rho V^2 + gZ = \text{Constant}$ Bernoulli's equation per unit volume.

$\frac{P}{\rho g} + \frac{V^2}{2g} + Z = \text{Constant}$ Bernoulli's equation per unit weight.

Limitations of Bernoulli's theorem:

- The above equation has been derived by assuming that the velocity of every element of the liquid across any cross-section of the pipe is uniform. Practically, it is not true. The elements of the liquid in the innermost layer have the maximum velocity. The velocity of the liquid decreases towards the walls of the pipe. Therefore, we should take into account the mean velocity of the liquid.
- While deriving Bernoulli's equation, the viscous drag of the liquid has not been taken into consideration. The viscous drag comes into play, when a liquid is in motion.
- Bernoulli's equation has been derived on the assumption that there appears no loss of energy, when a liquid is in motion. In fact, some kinetic energy is converted into heat energy and a part of it is lost due to shear force.
- If the liquid is flowing along a curved path, the energy due to centrifugal force should also be taken into consideration.

Q.61

Sol. Given,

Length of conical tube = 2m

The conical tube under given condition can be represented by the following figure.

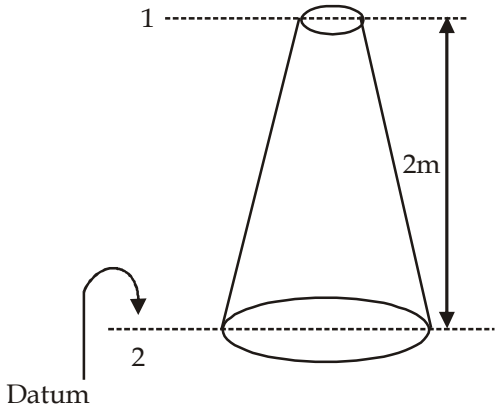

$$\text{Velocity head}_{)_1}, \frac{V_1^2}{2g} = 1.27\text{m}$$

$$\text{Pressure head}_{)_1}, \frac{p_1}{\gamma_w} = 2.50\text{m}$$

$$\text{Velocity head}_{)_2}, \frac{V_2^2}{2g} = 0.203\text{m}$$

$$\text{Pressure head}_{)_2}, \frac{p_2}{\gamma_w} = 5.407\text{m}$$

We know that, flow takes from higher energy lever to lower energy level.

Total energy head at section (1), i.e. at upper end (E_1)

$$E_1 = \frac{p_1}{\gamma} + \frac{V_1^2}{2g} + z_1$$

$$E_1 = 2.5 + 1.27 + 2 = 5.77 \text{ m}$$

Total energy head at section (2), i.e. at lower end, (E_2)

$$E_2 = \frac{p_2}{\gamma} + \frac{V_2^2}{2g} + z_2$$

$$= 5.407 + 0.203 + 0 = 5.61\text{m}$$

Since $E_1 > E_2$, therefore flow will take place from upper end to lower end.

Q.62

Sol. **Coefficient of Velocity (C_v) :** It is defined as the ratio between the actual velocity of a jet of liquid at vena contracta and the theoretical velocity of jet. It is denoted by C_v and mathematically, C_v is given as

$$C_v = \frac{\text{Actual velocity of jet at vena - contracta}}{\text{Theoretical velocity}} = \frac{V}{\sqrt{2gH}}$$

Where V = Actual velocity

$\sqrt{2gH}$ = Theoretical velocity

The value of C_v varies from 0.95 to 0.99 for different orifices, depending on the shape, size of the orifice and on the head under which flow takes place. Generally the value of C_v = 0.98 is taken for sharp-edged orifices.

Coefficients of Contraction (C_c) : It is defined as the ratio of the area of the jet at vena-contracta to the area of the orifice. It is denoted by C_c.

Let a = Area of orifice and

a_c = Area of jet at vena-contracta

Then $$C_c = \frac{\text{Area of jet at vena - contracta}}{\text{Area of orifice}} = \frac{a_c}{a}$$

The value of C_c varies from 0.61 to 0.69 depending on shape and size of the orifice and head of liquid under which flow takes place. In general, the value of C_c may be taken as 0.64.

Coefficients of Discharge (C_d) : It is defined as the ratio of the actual discharge from an orifice to the theoretical discharge from the orifice. It is denoted by C_d. If Q is actual discharge and Q_{th} is the theoretical discharge then mathematically, C_d is given as

$$C_d = \frac{Q}{Q_{th}} = \frac{\text{Actual velocity} \times \text{Actual area}}{\text{Theoretical velocity} \times \text{Theoretical area}}$$

$$C_d = \frac{\text{Actual velocity}}{\text{Theoretical velocity}} \times \frac{\text{Actual area}}{\text{Theoretical area}}$$

$\therefore$ $$C_d = C_v \times C_c$$

The value of C_d varies from 0.61 to 0.65. For general purpose the value of C_d is taken as 0.62.

Q.63

Sol. **Buckingham's-π-theorem states that:-**

If there are m physical variables (dependent and independent) in any physical phenomenon. And these can be expressed completely in terms of n fundamental dimension (M, L, T etc) Then the relationship among the physical variables can be described in terms of (m - n) dimensionless and independent π-terms.

Why it is superior to Rayleigh's method:

Buckingham's-π- Theorem is generally considered superior to Rayleigh's method for dimensional analysis because it provides a more systematic and efficient approach, especially when dealing with a large number of variables. Buckingham's theorem allows for the direct determination of the number of dimensionless groups (π-terms) that govern the behavior of a physical system, while Rayleigh's method can become computationally intensive when many variables are involved.

Q.64

Sol. In dimensional analysis using Buckingham's-π-theorem, repeating variables are the variable that are used again and again to form all the π-terms. These variables are common in each π-term and help to make each term dimensionless.

Guidelines for selecting Repeating Variables:-

- Select the first repeating variable from those describing the geometry of flow. Ex:- size and shape of fluid passage or of the moving body such as diameter, length, etc.
- Select the second repeating variable from those representing the fluid properties such as density, viscosity, surface tension, elasticity and vapour pressure.
- Select the third repeating variable from those specifying the fluid motion such as velocity, acceleration, discharge, pressure, force, power.
- Repeating variables should consider all basic fundamental dimensional parameters.
- They should be selected from independent variables

Q.65

Sol. **Reynold's Number (Re):** It is defined as the ratio of inertia force of a flowing fluid and the viscous force of the fluid. The expression for Reynold's number is obtained as

$$Re = \frac{\rho V L}{\mu}$$

Where,

ρ = density
V = average velocity
L = characteristic length
μ = viscosity

Reynold's number defined the type of flow :-

1. **For pipe flow**
   If the reynold's numbers is less than 2000, flow will be laminar
   If the reynold's number is between 2000 & 4000, transition region exists
   If the reynold's number is greater than 4000, flow will be turbulent
2. **For flow over the plate**
   If the reynold's numbers is less than 5×10^5, flow will be laminar
   If the reynold's numbers is more than 5×10^5, flow will be turbulent

3. **For open channel**
   If the reynold's numbers is less than 500, flow will be laminar
   If the reynold's number is between 500 & 2000, transition region exists
   If the reynold's numbers is more than 2000, flow will be turbulent

Q.66

$$Q_p / Q_m = (L_r)_H \times \left[(L_r)_V\right]^{3/2}$$

where,

Q_p = discharge through prototype
Q_m = discharge through model
$(Lr)_H$ = horizontal scale ratio
$(L_r)_v$ = vertical scale ratio

Sol. Given,

$(Lr)_H$ = horizontal scale ratio
$(L_r)_v$ = vertical scale ratio
Q_p = discharge through prototype
Q_m = discharge through model

Distorted models are used in river models, where Froude's law is applicable. In this type of models, different scale ratio for width (B) and depth (h) are used.

$$(Lr)_H = \frac{L_p}{L_m} = \frac{B_p}{B_m}$$

$$(L_r)_V = \frac{h_p}{h_m}$$

As per Froude's law,

$$\frac{V_r}{\sqrt{gy_r}} = 1 \Rightarrow V_r = \sqrt{y_r}$$

$\Rightarrow$ Velocity ratio, $V_r = \sqrt{\frac{h_p}{h_m}} = \sqrt{(L_r)_v}$

Area ratio, $A_r = \frac{B_p.h_p}{B_m.h_m} = (L_r)_h.(L_r)_V$

Discharge ratio, $Q_r = A_r V_r = (L_r)_H (L_r)_V \sqrt{(L_r)_V}$

$$= (L_r)_H \left[(L_r)_V\right]^{3/2}$$

$\Rightarrow$ $Q_r = \frac{Q_p}{Q_m} = (L_r)_H \times \left[(L_r)_V\right]^{3/2}$

Q.67

Sol. **Hydraulic gradient line and total energy line or energy gradient line:**

1. **Total energy line:-**
   - It is a line joining the point representing the value of total head at various cross section of pipe in pipe flow.
   - These lines always go down in the direction of flow until or unless some energy supplied externally. Ex:- pump.
2. **Hydraulic gradient line:-**
   - It is the line joining the point representing the value of piezometric head at the various cross section of pipe in pipe flow.
   - These line may go up or down in direction of flow.

- These line always below the total energy line.
- In a uniform diameter pipe hydraulic gradient line always parallel to total energy line and vertical gap between the two line at any section of pipe represent the value of kinetic head.

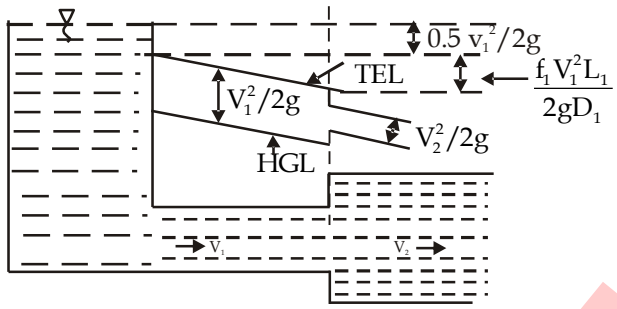

Q.68

Sol. Power Transmission through pipe:-

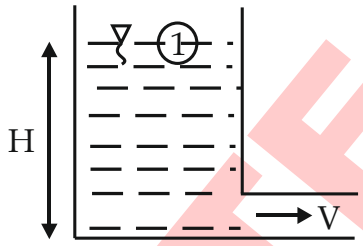

At point 1

$$\text{Energy (Joule)} = mgH$$

$$\text{Power (watt)} = \dot{m}gH \qquad (m = \text{mass flow rate} = \rho AV)$$

$$(\text{Power})_{\text{Input}} = \dot{m}gH$$

$$P_{output} = \dot{m}g(H - h_f)$$

$$P_{output} = \rho AVg(H - h_f)$$

$$P_{output} = \rho AVg\left(H - \frac{fLV^2}{2gD}\right)$$

$$P_{output} = \rho Ag\left(HV - \frac{fLV^3}{2gD}\right)$$

For maximum power output

$$\frac{dP_{output}}{dV} = 0$$

$$\frac{d}{dV}\left[\rho Ag\left(HV - \frac{fLV^3}{2gD}\right)\right] = 0$$

$$\rho Ag\left[H - \frac{3fLV^2}{2gD}\right] = 0$$

$$\rho Ag(H - 3h_f) = 0$$

$$\rho Ag \neq 0$$

$$H - 3h_f = 0$$

$$h_f = \frac{H}{3} = 33.33\% \rightarrow \text{minimum head losses to fixed maximum power output}$$

$$(P_{output})_{max} = H - h_f$$

$$H - \frac{H}{3} = \frac{2H}{3} = 66.67\%$$

$$(P_{output})_{max} = \frac{2H}{3} = 66.67\% \rightarrow \text{maximum power output}$$

Q.69

Sol. **Syphon:-**

A siphon is a long bent pipe used to carry water from a higher elevation reservoir to a lower elevation reservoir, especially when a hill or high-level obstruction lies between the two reservoirs.

Applications of Syphon:

- Irrigation and drainage over obstacles
- Emptying tanks, containers, or basins
- Hydraulics and municipal water supply
- Inverted siphons in civil structures (under roads, canals)

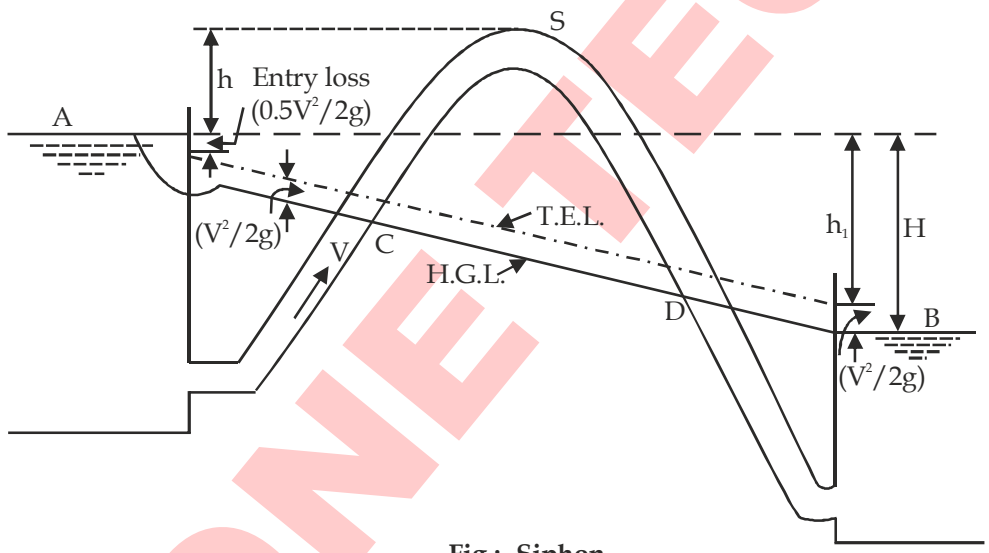

Fig.:- Siphon

Working of a Syphon:

1. **Priming:**
   The syphon pipe is initially filled with liquid (air must be removed).
2. **Flow Initiation:**
   Once filled, gravity causes the water in the longer outlet leg (SB) to fall, creating a suction effect that draws water from the upper reservoir into the pipe.
3. **Pressure Distribution:**
   - At points below C and D: Pressure is above atmospheric.
   - At points C and D: Pressure is atmospheric.
   - Between C and D (especially summit S): Pressure becomes below atmospheric (negative gauge pressure).
4. **Limitations Due to Pressure Drop:**
   - Pressure at summit S can theoretically drop to –10.3m of water head (perfect vacuum), but in practice, it must not fall below 2.7m absolute pressure ($\approx$7.6m vacuum) to avoid:
     - Air-lock formation (due to dissolved air coming out)
     - Vapor formation (causing cavitation and flow break)
5. **Flow Continues Automatically:**
   As long as outlet remains lower and no air enters, flow continues by siphon action.

Q.70

Sol. Applying Bernoulli's equation between the two reservoirs, we get

$$8 = 0.5\frac{V^2}{2g} + \frac{fLV^2}{2gD} + \frac{V^2}{2g}$$

or
$$8 = \frac{V^2}{2g}\left[1.5 + \frac{fL}{D}\right]$$

$$8 = \frac{V^2}{2g}\left[1.5 + \frac{0.02 \times 600}{0.30}\right]$$

or
$$V = 1.945 \text{ m/s}$$

$\therefore$ Discharge, $Q = \frac{\pi D^2}{4} \times V$

$$= \frac{\pi \times (0.30)^2}{4} \times 1.945$$

$$= 0.1375 \text{ m}^3/\text{s}$$

Applying Bernoulli's equation between the water surface in the upper reservoir and the summit of the siphon, we have

$$10.3 = 0+5+0.5\frac{V^2}{2g} + \frac{fL_1V^2}{2gD} + \frac{V^2}{2g}$$

or
$$10.30 = 0 + 5 + \frac{V^2}{2g}\left[1.5 + \frac{fL_1}{D}\right]$$

or
$$10.3 = 0 + 5 + \frac{(1.945)^2}{2 \times 9.81}\left[1.5 + \frac{0.02 \times L_1}{0.30}\right]$$

$\therefore$ $L_1 = 390$ m

Q.71

Sol. **(i) Stream-lined body :-** A stream-lined body is defined as that body whose surface coincides with the stream-lines, when the body is places in a flow. In that case the separation of flow will take place only at the trailing edge (or rearmost part of the body). Though the boundary layer will start at the leading edge, will become turbulent from laminar, yet it does not separate upto the rearmost part of the body in the case of stream-lined body. Thus behind a stream-lined body, wake formation zone will be very small and consequently the pressure drag will be very small. Then the total drag on the stream-lined body will be due to friction (shear) only. A body may be stream-lined:

1. At low velocities but may not be so at higher velocities.
2. When placed in a particular position in the flow but may be so when placed in another position.

Bluff Body:- A bluff body is defined as that body whose surface does not coincide with the streamlines, when placed in a flow. Then the flow is separated from the surface of the body much ahead of its trailing edge with the result of a very large wake formation zone. Then the drag due to pressure will be very large as compared to the drag due friction on the body. Thus the bodies of such a shape in which the pressure drag is very large as compared to friction drag are called bluff bodies.

(ii) Friction drag :- It is depends mainly on smoothness of surface of the object moving through the fluid. It is also called surface drag or skin drag.

Pressure drag:- It is depends mainly on the cross-sectional area of the body presented to the fluid. It is also called form drag.

Q.72

Sol. As the boundary layer develops, upto a certain portion of the plate from the leading edge, the flow in the boundary layer exhibits all the characteristics of laminar flow. This is so irrespective of whether the flow of the incoming stream is laminar or turbulent. This is known as laminar boundary layer. If the plate is sufficiently long, then beyond some distance from the leading edge the laminar boundary layer becomes unstable and the flow in the boundary layer exhibits the characteristics between those of laminar and turbulent flow. This region of the boundary layer is usually small and is known as transition region. After the transition region the flow in the boundary layer becomes turbulent. In this portion of the boundary layer there is a rapid increase in its thickness and it is known as turbulent boundary layer. If the plate is very smooth, even in the region of turbulent boundary layer, there is a very thin layer adjacent to the boundary, in which the flow is laminar. This thin layer is commonly known as laminar sublayer, and its thickness is represented by δ'.

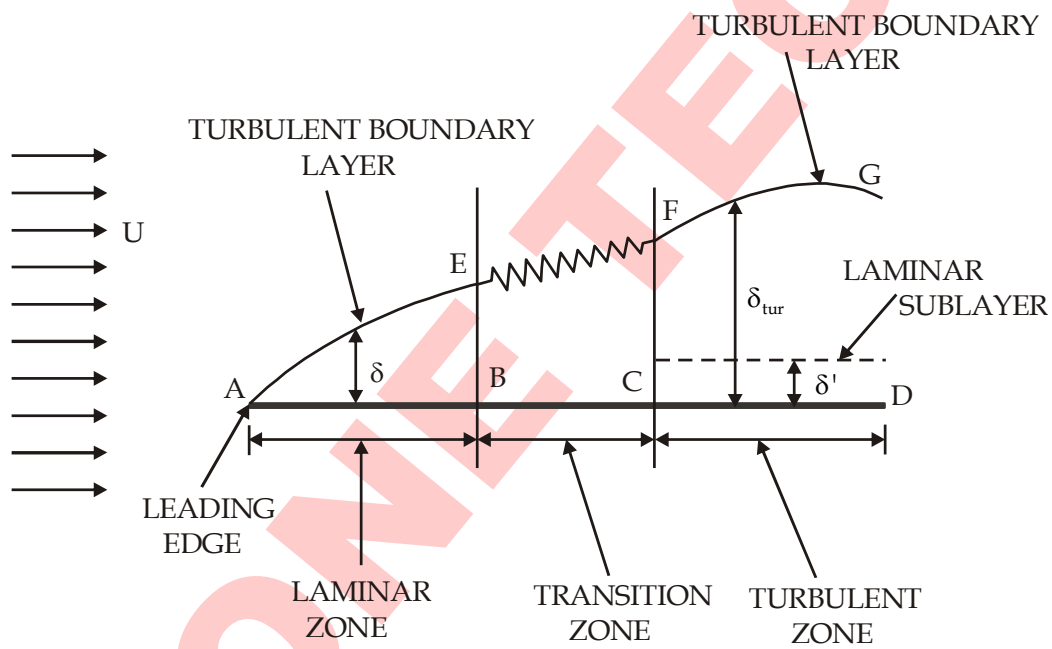

Figure: Flow over a plate

Boundary Layer Thickness (δ) : It is defined as the distance from the boundary of the solid body measured in the y-direction to the point, where the velocity of the fluid is approximately equal to 0.99 times the free stream velocity (U) of the fluid. It is denoted of the symbol δ. For laminar and turbulent zone it is denoted as:

1. δ_{lam} = Thickness of laminar boundary layer.
2. δ_{tur} = Thickness of turbulent boundary layer, and
3. δ' = Thickness of laminar sub-layer.

PART - C

20 Marks Questions

Q.73

Sol. **(i)** Compressibility (β) is the reciprocal of the bulk modulus of elasticity (K), which is defined as the ratio of compressive stress to volumetric strain.

Consider a cylinder fitted with a piston as shown in Figure.

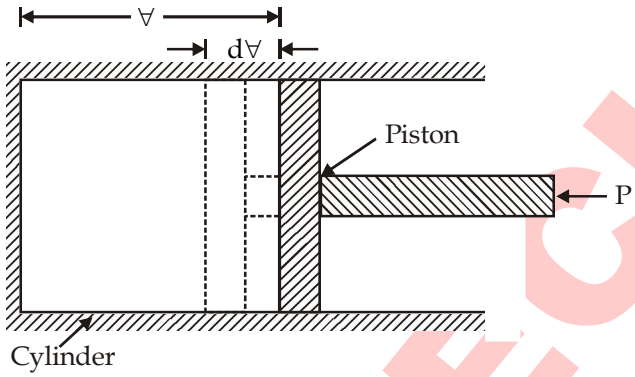

Let $\forall$ = Volume of a gas enclosed in the cylinder

p = Pressure of gas when volume is $\forall$

Let the pressure is increased to p + dp, the volume of gas decreases from $\forall$ to $\forall - d\forall$.

Thus increase in pressure $= dp\ N/m^2$

& Decrease in volume $= d\forall$

$$\therefore \quad \text{Volumetric strain} = -\frac{d\forall}{\forall}$$

–ve sign means the volume decreases with increase of pressure.

$$\therefore \quad \text{Bulk modulus, } K = \frac{\text{Increase of pressure}}{\text{Volumetric strain}}$$

$$K = \frac{dp}{\frac{-d\forall}{\forall}} = -\forall\frac{dp}{d\forall} \qquad \text{...(i)}$$

As we know that

$$\text{Compressibility, } \beta = \frac{1}{K}$$

$$\therefore \quad \beta = \frac{-1}{\forall}\frac{d\forall}{dp}$$

In general $m = \rho\forall$

Differentiate it

$$0 = \rho d\forall + \forall d\rho$$

$$\frac{-d\forall}{\forall} = \frac{d\rho}{\rho} \qquad \text{...(ii)}$$

On using equation (ii) in equation (i) we get,

$$k = \frac{dp}{\left(\frac{d\rho}{\rho}\right)} = \frac{\rho dp}{d\rho}$$

$\therefore$ $$\beta = \frac{1}{\rho}\frac{d\rho}{dp} \qquad \left(\text{Compressibility} = \frac{1}{K}\right)$$

Relationship between Bulk Modulus (K) and pressure (p) for a Gas

The relationship between bulk modulus of elasticity (K) and pressure for a gas for two different processes of compression are as :

(a) **For Isothermal process :** Equation gives the relationship between pressure (p) and density (ρ) of a gas as

$$p\forall = \text{Constant}$$

Differentiating this equation, we get (p and $\forall$ both are variables)

$$pd\forall + \forall dp = 0 \text{ or } pd\forall = -\forall dp \text{ or } p = \frac{-\forall dp}{d\forall}$$

On substituting this value in equation (i), we get

$$K = p = \rho RT \qquad (\text{We know that } p = \rho RT)$$

& $$\beta = \frac{1}{K} = \frac{1}{p} = \frac{1}{\rho RT}$$

(b) **For Adiabatic Process :** Using equation for adiabatic process

$$\frac{p}{\rho^n} = \text{Constant or } p\forall^n = \text{Constant}$$

Differentiating, we get $pd(\forall^n) + \forall^n(dp) = 0$

or $$p \times n \times \forall^{n-1} d\forall + \forall^n dp = 0$$

or $$pnd\forall + \forall dp = 0 \qquad \text{[Cancelling } \forall^{n-1} \text{ to both sides]}$$

or $$pnd\forall = -\forall dp \text{ or } pn = -\frac{\forall dp}{d\forall}$$

On substituting this value in equation (i), we get

$$K = np$$

$$\beta = \frac{1}{K} = \frac{1}{np}$$

where, K = Bulk modulus and n = Ratio of specific heats.

(ii) From the defination of the bulk modulus of elasticity,

$$k = -\frac{dp}{dv/v}$$

For 2% reduction in volume, $= \frac{dv}{v} = 0.02$

Taking care of units,

$$dp = 210 \times 100 \times 100 \times 0.02 = 42{,}000\,kN/m^2$$

$$= 42\,MN/m^2$$

Now, by definition, mass density is the mass per unit volume i.e.,

$$\rho \propto \frac{1}{v}$$

$$\frac{d\rho}{\rho} = \frac{dv}{v}$$

If $\frac{dv}{v}$ = 2% reduction in volume then $\frac{d\rho}{\rho}$ must be 2% increase in density.

Q.74

Sol. Given

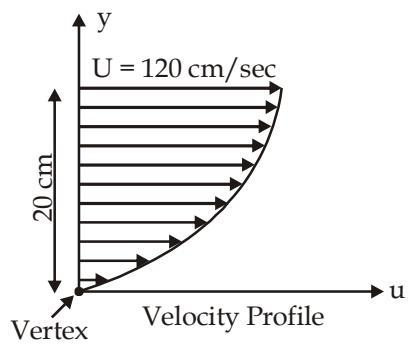

Distance of surface from plate $= 20$ cm

Velocity at surface, $U = 120$ cm/sec

Viscosity, $\mu = 8.5 \text{ poise} = \frac{8.5}{10}\frac{N.s}{m^2} = 0.85\frac{N.s}{m^2}$

The velocity profile is given parabolic. Hence equation of velocity profile is

$$u = ay^2 + by + c \quad \text{....(i)}$$

Equation of velocity gradient is,

$$\frac{du}{dy} = 2ay + b \quad \text{...(ii)}$$

where a, b and c are constants. Their values are determined from boundary conditions as

(a) at $y = 0, u = 0$

(b) at $y = 20$ cm, $u = 120$ cm/sec

(c) at $y = 20$ cm, $\frac{du}{dy} = 0$

Substituting boundary condition (a) in equation (i), we get

$$c = 0$$

Boundary condition (b) on substitution in (i) gives

$$120 = a(20)^2 + b(20) = 400a + 20b \quad \text{... (iii)}$$

Boundary condition (c) on substitution in equation (ii) gives

$$\frac{du}{dy} = 2ay + b \quad \text{.... (iv)}$$

or at $y = 20, \frac{du}{dy} = 0$

$$0 = 40a + b$$

$$b = -40\,a$$

Substituting this value in equation (iii), we get

$$120 = 400\,a + 20 \times (-40a)$$

$$= 400a - 800a = -400a$$

$$\therefore \quad a = \frac{120}{-400} = -\frac{3}{10} = -0.3$$

$$\therefore \quad b = (-40)\times(-0.3) = 12.0$$

Substituting the values of a, b and c in equation (i)

$$u = -0.3\,y^2 + 12\,y$$

Velocity Gradient

$$\frac{du}{dy} = -0.3 \times 2y + 12 = -0.6y + 12$$

at y = 0, velocity gradient

$$\left(\frac{du}{dy}\right)_{y=0} = -0.6 \times 0 + 12 = 12\ s^{-1}$$

at y = 10 cm

$$\left(\frac{du}{dy}\right)_{y=10} = -0.6 \times 10 + 12 = -6 + 12 = 6\,s^{-1}$$

at y = 20 cm

$$\left(\frac{du}{dy}\right)_{y=20} = -0.6 \times 20 + 12 = -12 + 12 = 0$$

Shear stresses :

shear stress is given by $\tau = \mu \frac{du}{dy}$

(i) shear stress at y = 0 $\tau = \mu\left(\frac{du}{dy}\right)_{y=0} = 0.85 \times 12.0 = 10.2\,N/m^2$

(ii) shear stress at y = 10, $\tau = \mu\left(\frac{du}{dy}\right)_{y=10} = 0.85 \times 6.0 = 5.1\ N/m^2$

(iii) shear stress at y = 20, $\tau = \mu\left(\frac{du}{dy}\right)_{y=20} = 0.85 \times 0 = 0$

Q.75

Sol. **(a) Capillarity or capillary effect :-** When a tube having a very-very small diameter (Capillary tube) inserted in a large reservoir of liquid then the liquid will start to rise or fall in the tubes this effect is known as capillary effect or capillarity.

The rise or fall of a liquid in capillary tubes is decided by the direction of surface tension and the direction of surface tension will be decided by mutual behaviour of liquid and surface.

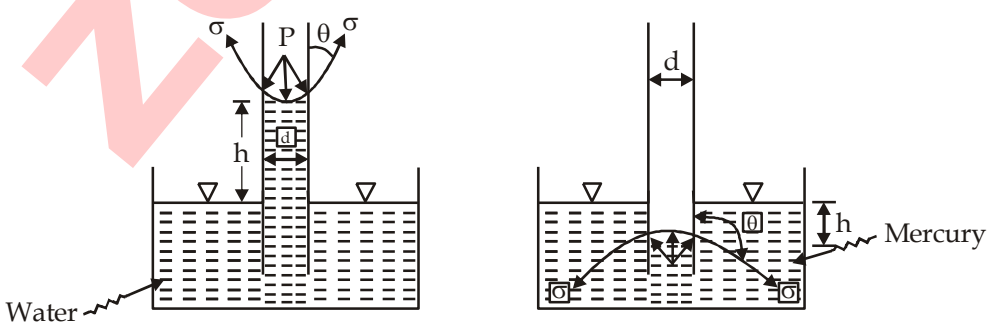

(a) Capillary rise, θ < 90° **(b) Capillary fall, θ > 90°**

Capillary Rise and Fall in Glass Tube

Expression for Capillary Rise :- Consider a glass tube of small diameter 'd' opened at both ends and is inserted in a liquid, say water. The liquid will rise in the tube above the level of the liquid.

Let h = height of the liquid in the tube. Under a state of equilibrium, the weight of liquid of height h is balanced by the force at the surface of the liquid in the tube. But the force at the surface of the liquid in the tube is due to surface tension.

Let σ = Surface tension of liquid

θ = Angle of contact between liquid and glass tube.

The weight of liquid of height h in the tube

$$= (\text{Area of tube} \times h) \times \rho \times g$$

$$= \frac{\pi}{4} d^2 \times h \times \rho \times g \qquad \text{....(i)}$$

where ρ = Density of liquid

Vertical component of the surface tensile force

$$= (\sigma \times \text{Circumference}) \times \cos\theta$$

$$= \sigma \times \pi d \times \cos\theta \qquad \text{....(iii)}$$

For equilibrium, equating (i) and (ii), we get

$$\frac{\pi}{4} d^2 \times h \times \rho \times g = \sigma \times \pi d \times \cos\theta$$

or

$$h = \frac{\sigma \times \pi d \times \cos\theta}{\frac{\pi}{4} d^2 \times \rho \times g} = \frac{4\sigma\cos\theta}{\rho \times g \times d}$$

The value of θ between water and clean glass tube is approximately equal to zero and hence cos θ is equal to unity. Then rise of water is given by

$$h = \frac{4\sigma}{\rho \times g \times d}$$

Angle of contact

The liquid surface is usually curved when it is in contact with solid. The particular shape that it takes depends on the relative strengths of cohesive and adhesive forces. If

Adhesive force > Cohesive force : Liquid wets the solid surface and has concave meniscus

Adhesive force < Cohesive force : Liquid does not wet the solid surface and has convex meniscus

Adhesive force = Cohesive force : Liquid surface is plane.

Angle of contact is defined as the angle θ between the tangent to the liquid surface at the point of contact and the solid surface inside the liquid.

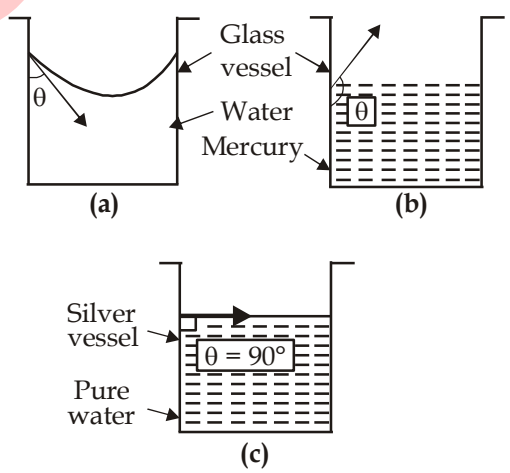

Defining angle of contact, for (a) concave (b) Convex (c) Plane meniscus

For those liquids which wet the walls of the vessel, the angle of contact is acute. For the liquids which do not wet the walls of the vessel, the angle of contact is obtuse.

The angle of contact for water and glass is about 8°, for mercury and glass it is 138° and for pure water and silver, angle of contact is 90°.

(b) From equation the capillary rise (or depression) is given as $h = \frac{2\sigma\cos\theta}{\rho g r}$

(i) For water

$\theta = 0, \cos\theta = 1$

$\sigma = 0.0736$ N/m

specific weight $(\rho g) = 9810$ N/m³

$r = \frac{3}{2} = 1.5 \text{ mm} = 1.5\times10^{-3}\text{ m}$

By substitution, we get $h = \frac{2\times0.0736\times1}{9810\times1.5\times10^{-3}}$

$= 1.00 \times 10^{-2}$ m

$= 10$ mm

(ii) For mercury

$\theta = 130^{o}, \cos\theta = -0.6428$

$\sigma = 0.51$ N/m

specific weight $(\rho g) = (13.6 \times 9810)$ N/m³

$r = \frac{3}{2} = 1.5\text{ mm} = 1.5\times10^{-3}\text{ m}$

By substitution, we get $h = \frac{2\times0.51\times(-0.6428)}{13.6\times9810\times1.5\times10^{-3}}$

$= -3.276 \times 10^{-3}$ m

$= -3.276$ mm

The negative (–) sign in the case of mercury indicates that there is capillary depression.

Q.76

Sol. **Pressure force on inclined surface:-**

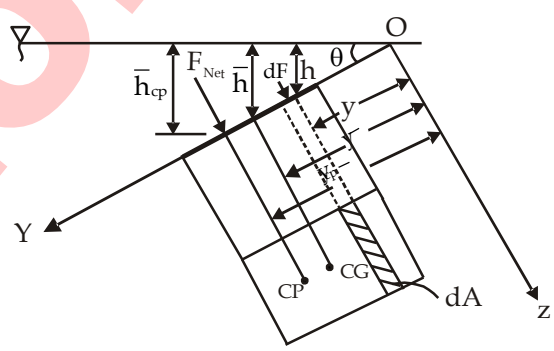

Let us consider a plane surface inclined at an angle θ with the horizontal.

A = Total area of the surface

$\bar{h}$ = Depth of C.G. of inclined area from free surface

h* or $\bar{h}_{cp}$ = Distance of centre of pressure from free surface of liquid

θ = Angle made by the plane of the surface with free liquid surface

$\bar{y}$ = Distance of C.G. of the inclined surface from O-Z

y^* or $\bar{y}_{cp}$ = Distance of the centre of pressure from O-Z

As we know that

$$P = \rho g h$$
$$dF = PdA$$
$$dF = \rho g h dA$$

Integrate it

$$F = \int \rho g h dA = \rho g \int h dA \qquad \left| \because h = y \sin\theta \right.$$
$$= \rho g \int y \sin\theta dA$$
$$F = \rho g \sin\theta \int y dA \qquad \left| \because \int y dA = Ay_1 + Ay_2 .... = A\bar{y} \right.$$
$$F = \rho g \sin\theta \bar{y} A \qquad \left| \because \bar{h} = \bar{y} \sin\theta \right.$$
$$F = \rho g \bar{h} A = F_{Net}$$

Location of Total pressure force:-

Taking moment about O

$$F_{net} . \bar{y}_{cp} = \int dF.y$$
$$= \int pdA.y$$
$$= \int \rho g h \, dA.y$$
$$\rho g \bar{h} A \frac{\bar{h}_{CP}}{\sin\theta} = \rho g \int y^2 \sin\theta dA \qquad \left(\because \bar{y}_{CP} = \frac{\bar{h}_{CP}}{\sin\theta} \right)$$
$$\bar{h} A \frac{\bar{h}_{cp}}{\sin\theta} = \sin\theta \int y^2 dA$$
$$\bar{h}_{cp} = \frac{\sin^2\theta}{\bar{h}A} I_{xx}$$

By the theorem of parallel axis, we have

$$I_{xx} = I_{GXX} + A(\bar{y})^2$$

Where I_{GXX} = Moment of inertia (M.O.I) of area about an axis passing through the centre of gravity (C.G.) of the area and parallel to the free surface of liquid.

Hence,
$$\bar{h}_{cp} = \frac{\sin^2\theta}{\bar{h}A} \left[I_{Gxx} + A(\bar{y})^2 \right]$$
$$\bar{h}_{cp} = \frac{\sin^2\theta}{\bar{h}A} \left[I_{Gxx} + A \frac{\bar{h}^2}{\sin^2\theta} \right] \qquad \left(\because \bar{y} = \frac{\bar{h}}{\sin\theta} \right)$$
$$\bar{h}_{cp} = \frac{I_{GXX} \times \sin^2\theta}{\bar{h}A} + \bar{h}$$

As in question asking for force exerted on a sub-merged vertical plane surface i.e. $\theta = 90°$

Hence,

$$\bar{h}_{cp} = \bar{h} + \frac{I_{Gxx}}{\bar{h}A}$$

Q.77

Sol. Hydrostatic force on curved surface:-

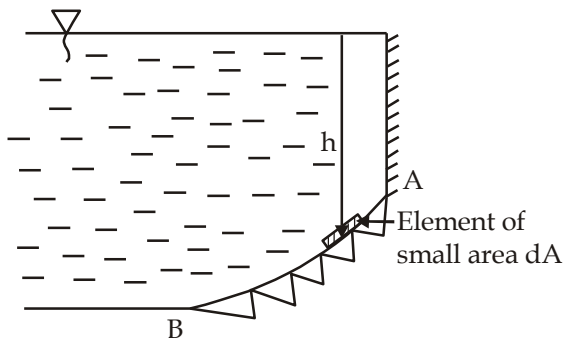

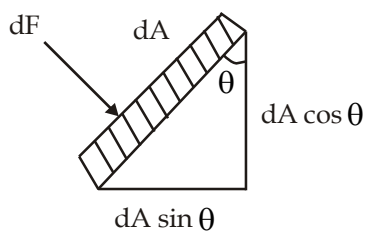

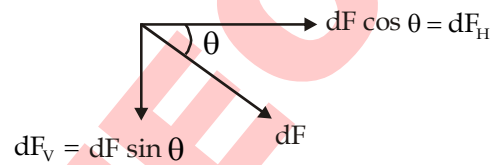

Force acting on small area 'dA'

$$dF = (\text{Area} \times \text{Pressure})$$

$$dF = (\rho gh) \times dA$$

This force will have two component

$$\text{Horizontal component} = (dF)_H = dF\cos\theta$$

$$(dF)_H = (\rho gh)dA\cos\theta$$

$$\text{Vertical component} = (dF)_V = dF\sin\theta$$

$$(dF)_V = (\rho gh)dA\ \sin\theta$$

Total horizontal force on curved surface

$$F_H = \int (dF)_H = \int (\rho gh)dA\cos\theta$$

$$F_H = \rho g\int h(dA\cos\theta)$$

$$F_H = \rho g\ \bar{h}(A_v)$$

where:- A_V = Projected area of curved surface on vertical plane.

$\bar{h}$ = Depth of C.G. of projected area from free surface of water.

Hence,

$F_H = \rho g\ \bar{h}(A_V)$ = Total pressure force on projected area of curved surface on vertical plane.

Total vertical force on curved surface

$$F_v = \int (dF)_V = \int \rho gh\ dA\sin\theta$$

$$F_V = \rho g\int h(dA\sin\theta)$$

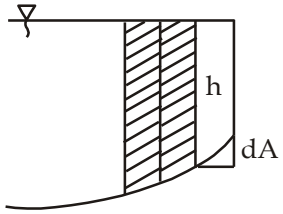

here project area is not
used because height is changed

$F_V = \rho g \times$ (volume of water column above curved surface)

$F_V = \rho g \forall$

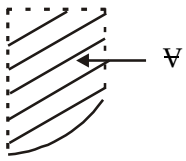

where :- $\forall$ = Volume of liquid above curved surface upto free surface of water.

Hence,

$F_V = \rho g \forall$ = mg = Weight of liquid displaced above the curved surface.

Resultant hydrostatic force on curved surface

$$F_R = \sqrt{(F_H)^2 + (F_V)^2}$$

Q.78

Sol. **(i)**

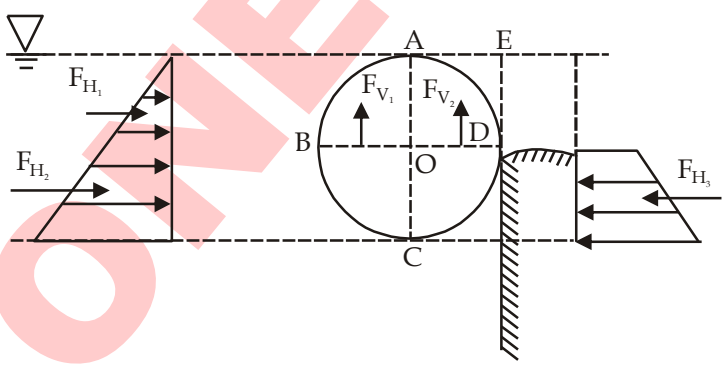

- Since the cylinder and wall are smooth. The weight of the cylinder is equal to the vertical component of the hydrostatic pressure acting on the cylinder.
- But we know that vertical component of hydrostatic force is equal to the weight of the fluid contained in the curved surface upto free surface.

Fv_1 = Weight of water in the portion ABC

= (γ) (volume of semi circle ABC)

$$= 9.81 \times \frac{1}{2}\pi r^2 \times 1.5 = 9.81 \times \frac{\pi \times (0.3)^2}{2} \times 1.5$$

= 2.08 kN

Centre of gravity of semicircle AB $= \left(\frac{4r}{3\pi}\right) = \left(\frac{4 \times 0.3}{3 \times \pi}\right) = 0.1273$ m

Fv_2 = Weight of water in portion ACDE. Acting vertically upwards at the centroid of the Area ACDE.

$$= \left[\left(9.81\times\frac{1}{4}\times\pi\times(0.3)^2\times1.5\right)+\left(9.81\times(0.3)^2\times1.5\right)\right]$$

$$= [1.0401 + 1.3244] = 2.3645 \text{ kN} \quad \text{... (ii)}$$

If x is the distance of center of gravity of ACDE from AC

then, $$2.364x = \left(\frac{1.0401\times4\times0.3}{3\pi}+1.3244\times\frac{0.3}{2}\right)$$

$$x = 0.14 \text{ m.}$$

$$\text{Weight of cylinder} = (Fv_1 + Fv_2)$$

$$= (2.08 + 2.3645) = 4.445 \text{ kN.}$$

(ii) Since F_{H_2} and F_{H_3} are equal and opposite it is clear from pressure diagram.

Hence F_{H_1} acting at the centre of pressure of the vertical projection of curved surface AB.

$$F_{H_1} = \left(9.81\times0.3\times105\times\frac{0.3}{2}\right)$$

$$= 0.6622 \text{ kN} \quad \text{... (iii)}$$

$$\text{Centre of pressure} = \left(\bar{x}+\frac{I_G}{A\bar{x}}\right)$$

$$= \left(\frac{0.3}{2}\right)+\frac{1.5\times(0.3)^3}{12\times(0.3\times1.5)\times\left(\frac{0.3}{2}\right)}$$

$$= (0.15 + 0.05) = 0.2 \text{ m.}$$

Thus, F_{H_1} acts at a depth of 0.20m from free surface or at a height of 0.1m above the centre of cylinder O.

∴ The Resultant force Exerted by the wall on the cylinder

$$F_{H_1} = 0.6622 \text{ kN}$$

(iii) The Resultant moment about the centre of cylinder due to hydrostatic forces will be given by

$$M = (F_{H_1}\times0.1)+(F_{V_1}\times0.1273)-(F_{V_2}\times0.14)$$

$$= (0.6622 \times 0.1) + (2.06 \times 0.1273) - (2.3645 \times 0.14)$$

$$= 2.6 \times 10^{-5} \simeq 0$$

Alternate Solution

(a)

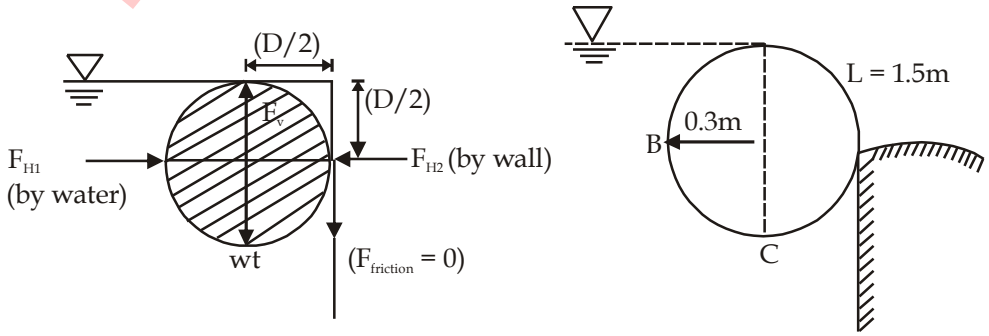

$$F_V = w + f_{friction}$$

as cylinder & wall are smooth $F_{friction} = 0$

F_v = wt of cylinder = wt of liq contained in shaded area

$$\text{wt of cylinder} = \left[\left(\frac{\pi}{4}D^2\right) + \left[\left(\frac{D}{2}\right)\times\left(\frac{D}{2}\right) - \frac{1}{4}\left(\frac{\pi}{4}\times D^2\right)\right]\right]\times\gamma_w\times L$$

$$= \left(\frac{3\pi(0.6)^2}{16} + \left(\frac{(0.6)^2}{4}\right)\right)\times 1.5\times 9.81$$

$$= 4.443 \text{ kN.}$$

(b) Net Horizontal force is due to horizontal force on surface AB.

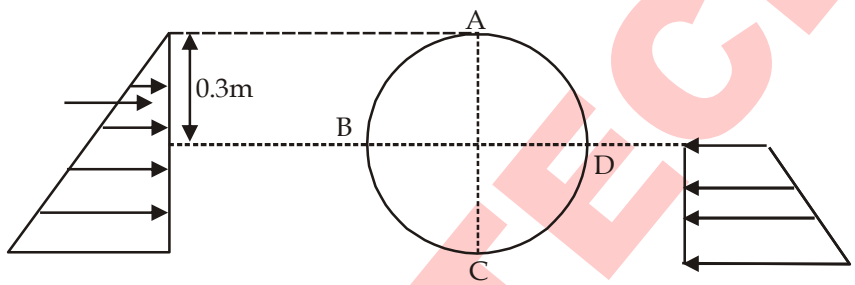

$$F_H = \frac{1}{2}\times\gamma_w(0.3)\times 0.3\times 1.5$$

$$= 0.662 \text{ kN}$$

Resultant force exerted by the wall on the cylinder, $F_H = 0.6622\,\text{kN}$

(c) All the water forces is perpendicular to the surface of cylinder.

$\therefore$ The resultant will also be passing through centre of cylinder.

$\Rightarrow$ Momentum generated by water forces about centre = 0

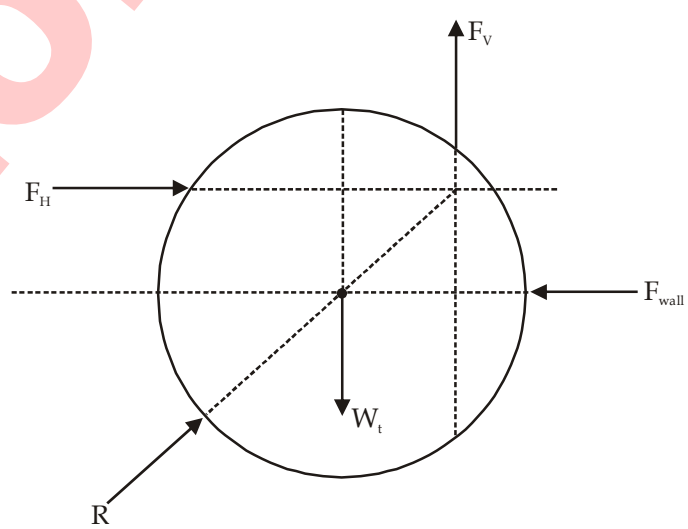

Q.79

Sol. Continuity equation is the only equation which indicates whether this flow is possible or not. Consider a fluid element as shown in figure.

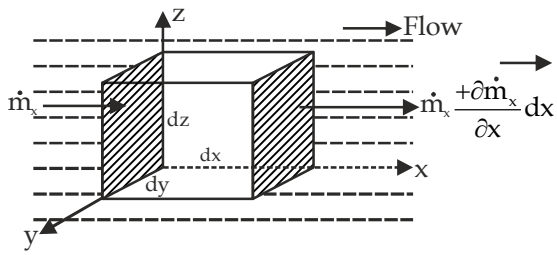

In general 3-D flow

$$\vec{V} = u\hat{i} + v\hat{j} + w\hat{k}$$

$$u, w, v \rightarrow \text{velocity component in x,y, z direction}$$

$$\vec{V} = F(x, y, z, t)$$

From conservation of mass–

$$(\dot{m}_{in} - \dot{m}_{out})_x = \dot{m}_x - \left(\dot{m}_x + \frac{\partial \dot{m}}{\partial x} dx\right)$$

$$= -\frac{\partial \dot{m}_x}{\partial x} dx = -\frac{\partial}{\partial x}[(\rho(dydz)u)dx]$$

$$dv = dx\,dy\,dz$$

$$(\dot{m}_{in} - \dot{m}_{out})_x = -\frac{\partial}{\partial x}(\rho u dv) \qquad .....(1)$$

Similarly in Y and Z direction,

$$(\dot{m}_{in} - \dot{m}_{out})_y = -\frac{\partial}{\partial y}(\rho v\, dv) \qquad .....(2)$$

$$(\dot{m}_{in} - \dot{m}_{out})_z = -\frac{\partial}{\partial z}(\rho w\, dv) \qquad .....(3)$$

By adding all above 3 equations we get

$$(\dot{m}_{in} - \dot{m}_{out}) = -dv\left[\frac{\partial}{\partial x}(\rho u) + \frac{\partial}{\partial y}(\rho v) + \frac{\partial}{\partial z}(\rho w)\right]$$

Now, $$(\dot{m}_{in} - \dot{m}_{out}) = \dot{m}_{st}$$

and $$\frac{\partial \dot{m}_{st}}{\partial t} = \frac{\partial}{\partial t}(\rho dv) = dv.\frac{\partial \rho}{\partial t}$$

$$\Rightarrow \quad -dv\left[\frac{\partial}{\partial x}(\rho u) + \frac{\partial}{\partial y}(\rho v) + \frac{\partial}{\partial z}(\rho w)\right] = dv.\frac{\partial \rho}{\partial t}$$

$$\Rightarrow \quad \frac{\partial}{\partial x}(\rho u) + \frac{\partial}{\partial y}(\rho v) + \frac{\partial}{\partial z}(\rho w) + \frac{d\rho}{dt} = 0$$

This equation is known as 3-D General continuity equation.

(1) For Steady Flow

$$\frac{\partial \rho}{\partial t} \rightarrow 0$$

$$\frac{\partial}{\partial x}(\rho u) + \frac{\partial}{\partial y}(\rho v) + \frac{\partial}{\partial z}(\rho w) = 0$$

(2) For Steady, Incompressible flow

$$\frac{\partial u}{\partial x}+\frac{\partial v}{\partial y}+\frac{\partial w}{\partial z}=0$$

(3) For Steady, Incompressible, 2-D flow (external flow)

$$\frac{\partial u}{\partial x}+\frac{\partial v}{\partial y}=0$$

(4) For I-D, steady flow

$$(\dot{m}_{in}-\dot{m}_{out})_x=0 \qquad \vec{v}=u\hat{i}$$

$$\frac{\partial}{\partial x}(\rho A u)=0 \qquad \vec{v}=u$$

$$\Rightarrow \qquad \frac{\partial}{\partial x}(\rho A v)=0$$

$$\rho_1 A_1 v_1=\text{constant}$$

$$\rho_1 A_1 v_1=\rho_2 A_2 v_2$$

If flow is incompressible

$$\rho_1=\rho_2$$

$$A_1 v_1=A_2 v_2$$

Q.80

Sol. **Statement of Bernoulli's Theorem :** It states that in a steady, ideal flow of an incompressible fluid the total energy at any point of the fluid is constant. The total energy consists of pressure energy, kinetic energy and potential energy or datum energy. These energies per unit weight of the fluid are:

$$\text{Pressure energy}=\frac{P}{\rho g}$$

$$\text{Kinetic energy}=\frac{v^2}{2g}$$

$$\text{Datum energy}=z$$

Thus mathematically, Bernoulli's theorem is written as

$$\frac{P}{\rho g}+\frac{v^2}{2g}+z=\text{Constant}$$

Bernoulli's equation from Euler's equation :

Euler's equation is an equation of motion in which the forces due to gravity and pressure are taken into consideration. This is derived by considering the motion of a fluid element along a stream-line as:

Consider a stream-line in which flow is taking place in s-direction as shown in figure. Consider a cylindrical element of cross-section dA and length ds.

Let consider a stream lined flow,

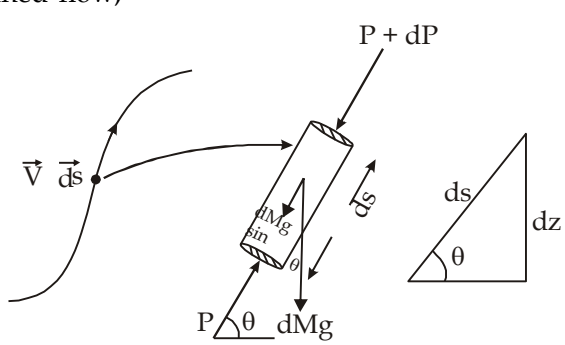

Writing equation in s-direction,

$$(P.dA) - (P + dP)dA - dMg\sin\theta = dM.a_s$$

$$-dPdA - \rho dA.dzg = \rho dA\, ds.a_s$$

$$dP + \rho d_s a_s + \rho g\, dz = 0 \quad \text{... (i)}$$

Where a_s is the acceleration in the direction of s

Now $a_s = \frac{dv}{dt}$, where v is a function of s and t.

$$a_s = \frac{\delta v}{\delta s}\frac{ds}{dt} + \frac{\delta v}{\delta t} = \frac{v\delta v}{\delta s} + \frac{\delta v}{\delta t}\left\{\because \frac{ds}{dt} = v\right\}$$

$\because$ $$a_s = v\frac{\delta v}{\delta s} + \frac{\delta v}{\delta t}$$

Hence, $$dP + \rho.ds\left(v\frac{\delta v}{\delta s} + \frac{\delta v}{\delta t}\right) + \rho g\, dz = 0$$

If the flow is steady, $\frac{\delta v}{\delta t} = 0$ and $\frac{\delta v}{\delta s} = \frac{dv}{ds}$

$$dP + \rho ds\, v\left(\frac{dv}{ds}\right) + \rho g\, dz = 0$$

$$dP + \rho v\, dv + \rho g\, dz = 0$$

$$\frac{dP}{\rho} + vdv + gdz = 0 \quad \text{... (ii)}$$

Euler's equation for steady and streamlined flow.

Bernoulli's equation from Euler's Equation

Bernoulli's equation is obtained by integration the Euler's equation of motion (ii) as

$$\int\frac{dP}{\rho} + \int gdz + \int vdv = \text{constant}$$

If flow is incompressible, ρ is constant and

$\therefore$ $$\frac{P}{\rho} + \frac{v^2}{2} + gz = \text{constant}$$

or $$\frac{P}{\rho g} + \frac{v^2}{2g} + z = \text{constant} \quad \text{... (iii)}$$

Equation (iii) is Bernoulli's equation in which

$\frac{P}{\rho g}$ = Pressure energy per unit weight of fluid or pressure head.

$\frac{v^2}{2g}$ = kinetic energy per unit weight of fluid or kinetic head.

z = potential energy per unit weight of fluid or potential head.

The following are the assumptions made in the derivation of Bernoulli's equation.

- The fluid is ideal, i.e., viscosity is zero
- The flow is steady
- The flow is incompressible
- The flow is irrotational
- The flow is in stream line

Q.81

Sol.

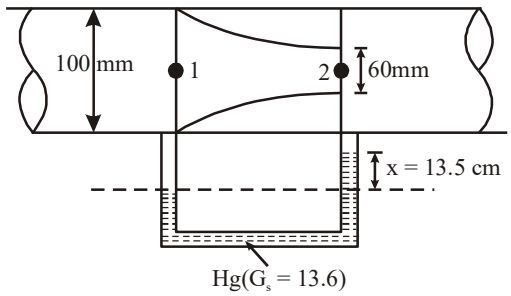

∴ Difference in pressure head

$$= \left(\frac{P_1 - P_2}{\gamma_w}\right) = \left(\frac{G_2}{G_1} - 1\right)x$$

$$= \left(\frac{13.6}{1} - 1\right)x = 12.6x \qquad \text{...(i)}$$

$$\therefore \quad \frac{v_2^2 - v_1^2}{2g} = \frac{P_1 - P_2}{\gamma_w} = \left(\frac{13.6}{1} - 1\right)x$$

$$\therefore \quad v_2^2 = \left(12.6x \times 2g + v_1^2\right)$$

$$v_2 = \sqrt{(25.2gx + v_1^2)} \qquad \text{...(ii)}$$

Given coefficient of velocity = 0.9,

$$\therefore \quad v_{2)actual} = 0.9V_{2)theoretical}$$

$$v_{2)actual} = 0.9 \times \sqrt{\left(25.2gx + v_1^2\right)}$$

$$\Rightarrow \quad v_{2)actual}^2 = 0.81[(25.2 \times 9.81 \times 0.135) + v_1^2]$$

$$\Rightarrow \quad \frac{Q^2}{a_2^2} - 0.81\frac{Q^2}{a_1^2} = 0.81 \times 25.2 \times 9.81 \times 0.135$$

$$= 27.033$$

$$\Rightarrow \quad \left[\frac{1}{a_2^2} - \frac{0.81}{a_1^2}\right]Q^2 = 27.033$$

$$\frac{16}{\pi^2}\left[\frac{1}{(0.06)^4} - \frac{1}{(0.1)^4}\right]Q^2 = 27.033$$

$$Q = 0.015757\, m^3/sec.$$

$$Q = 15.757\, l/sec$$

Q.82

Sol.

(a) The functional relationship for R may be expressed as

$$R = f(\mu, \rho, D, V)$$

According to buckingm's π theorem

$$m = \text{Total number of variable} = 5$$

$$n = \text{Number of fundamental dimensions involved} = 3$$

$$\text{Number of dimensionless-}\pi\text{-terms} = m - n = 2$$

So,

$$\pi_1 = \left[D^a v^b \rho^c\right]\mu$$

$$\pi_2 = \left[D^a v^b \rho^c\right]R$$

Now,

$$\pi_1 = [L]^a\left[LT^{-1}\right]^b\left[ML^{-3}\right]^c\left[ML^{-1}T^{-1}\right]$$

$$M^0L^0T^0 = [L]^a\left[LT^{-1}\right]^b\left[ML^{-3}\right]^c\left[ML^{-1}T^{-1}\right]$$

$$M^0L^0T^0 = M^{c+1}L^{a+b-3c-1}T^{-b-1}$$

Now compare the power of this equation then, we get

$$c = -1, b = -1 \text{ and } a = -1$$

Put the value of a, b, and c in π_1 then we get

$$\pi_1 = (D^{-1}v^{-1}\rho^{-1})\mu = \frac{\mu}{\rho v D}$$

Now,

$$\pi_2 = \left[D^a v^b \rho^c\right]R$$

$$\pi_2 = [L]^a\left[LT^{-1}\right]^b\left[ML^{-3}\right]^c\left[MLT^{-2}\right]$$

$$M^0L^0T^0 = M^{c+1}L^{a+b-3c+1}T^{b-2}$$

Now compare the power of this equation then, we get

$$c = -1, b = -2 \text{ and } a = -2$$

$$\pi_2 = \left[D^{-2}v^{-2}\rho^{-1}\right]R = \frac{R}{\rho v^2 D^2}$$

According to buckingm's π theorem

$$fn(\pi_1, \pi_2) = 0$$

or

$$\pi_2 = fn(\pi_1)$$

So,

$$\frac{R}{\rho v^2 D^2} = fn\left(\frac{\mu}{\rho v D}\right)$$

$$\frac{R}{\rho v^2 D^2} = \phi\left(\frac{\mu}{\rho v D}\right)$$

$\therefore$

$$R = \rho v^2 D^2 \phi\left(\frac{\mu}{\rho v D}\right) = k\left(\rho v^2 D^2\right)\left(\frac{\mu}{\rho v D}\right)$$

$$R = k\mu v D$$

ZONE TECH

(b) Given D= 1 mm; V = 20 mm/s; k = 3 π

For uniform velocity of the sphere, resistance R is equal to the gravitational force.

∴ By substitution, we get

$$R = \frac{4}{3}\pi r^3 g(\rho_s - \rho_f)$$

$$\because \quad R = k\mu v D,\ k = 3\pi \ \text{(Given)}$$

$$\therefore \quad 3\pi\mu v D = \frac{4}{3}\pi R^3 g(\rho_s - \rho_f)$$

$$6\pi\mu v R = \frac{4}{3}\pi R^3 g(\rho_s - \rho_f)$$

$$\mu = \frac{2}{9}\frac{R^2 g(\rho_s - \rho_f)}{v} = \frac{2\times(0.5\times10^{-3})^2\times9.81\times(7800-910)}{9\times0.02}$$

$$= 0.1878 \text{ N.s/m}^2$$

$$= 1.878 \text{ poise.}$$

Q.83

Sol. 1. **Reynold's Number (R_e) :** It is defined as the ratio of inertia force of a flowing fluid and the viscous force of the fluid. The expression for Reynold's number is obtained as

Inertia force (F_i) = Mass × Acceleration of flowing fluid

$$= \rho \times \text{Volume} \times \frac{\text{Velocity}}{\text{Time}} = \rho \times \frac{\text{Volume}}{\text{Time}} \times \text{Velocity}$$

$$= \rho \times AV \times V \qquad \{\because \text{ Volume per sec} = \text{Area} \times \text{Velocity} = A \times V\}$$

$$= \rho AV^2$$

Viscous force (F_v) = Shear stress × area $\qquad \left\{\because \tau = \mu\frac{du}{dy} \therefore \text{Force} = \tau \times \text{area}\right\}$

$$= \tau \times A$$

$$= \left(\mu\frac{du}{dy}\right)\times A = \mu.\ \frac{V}{L}\times A \qquad \left\{\because \frac{du}{dy} = \frac{V}{L}\right\}$$

By definition, Reynold's number

$$R_e = \frac{F_i}{F_v} = \frac{\rho AV^2}{\mu.\frac{V}{L}\times A} = \frac{\rho VL}{\mu}$$

$$= \frac{V\times L}{(\mu/\rho)} = \frac{V\times L}{\upsilon} \qquad \left\{\because \frac{\mu}{\rho} = \upsilon = \text{Kinematic viscosity}\right\}$$

In case of pipe flow, the linear dimension L is taken as diameter, d. Hence Reynold's number for pipe flow,

$$R_e = \frac{V\times d}{\upsilon} \text{ or } \frac{\rho Vd}{\mu}$$

2. **Froude's Number (F_e):** The Froude's number is defined as the square root of the ratio of inertia force of a flowing fluid to the gravity force. Mathematically, it is expressed as

$$F_e = \sqrt{\frac{F_i}{F_g}}$$

where $F_i = \rho AV^2$

and F_g = Force due to gravity

= Mass × Acceleration due to gravity

$= \rho \times \text{Volume} \times g = \rho \times L^3 \times g$ $\{\because \text{Volume} = L^3\}$

$= \rho \times L^2 \times L \times g = \rho \times A \times L \times g$ $\{\because L^2 = A = \text{Area}\}$

$$F_e = \sqrt{\frac{F_i}{F_g}} = \sqrt{\frac{\rho AV^2}{\rho ALg}} = \sqrt{\frac{V^2}{Lg}} = \frac{V}{\sqrt{Lg}}$$

3. **Euler's Number (E_u):** It is defined as the square root of the ratio of the inertia force of a flowing fluid to the pressure force. Mathematically, it is expressed as

$$E_u = \sqrt{\frac{F_i}{F_p}}$$

where F_p = Intensity of pressure × area $= p \times A$

and $F_i = \rho AV^2$

$$\therefore \quad E_u = \sqrt{\frac{\rho AV^2}{p \times A}} = \sqrt{\frac{V^2}{p/\rho}} = \frac{V}{\sqrt{p/\rho}}$$

4. **Weber's Number (W_e):** It is defined as the square root of the ratio of the inertia force of a flowing fluid to the surface tension force. Mathematically, it is expressed as

Weber's Number, $W_e = \sqrt{\frac{F_i}{F_s}}$

where F_i = Inertia force $= \rho AV^2$

and F_s = Surface tension force

= Surface tension per unit length × Length $= \sigma \times L$

$$W_e = \sqrt{\frac{\rho AV^2}{\sigma \times L}} = \sqrt{\frac{\rho \times L^2 \times V^2}{\sigma \times L}}$$

$$= \sqrt{\frac{\rho L \times V^2}{\sigma}} = \sqrt{\frac{V^2}{\sigma/\rho L}} = \frac{V}{\sqrt{\sigma/\rho L}}$$

5. **Mach's Number (M):** Mach's number is defined as the square root of the ratio of the inertia force of a flowing fluid to the elastic force. Mathematically, it is defined as

$$M = \sqrt{\frac{\text{Inertia force}}{\text{Elastic force}}} = \sqrt{\frac{F_i}{F_e}}$$

where $F_i = \rho AV^2$

and F_e = Elastic force = Elastic stress × Area

$= K \times A = K \times L^2$ $\{\because K = \text{Elastic stress}\}$

$$\therefore \quad M = \sqrt{\frac{\rho AV^2}{K \times L^2}} = \sqrt{\frac{\rho \times L^2 \times V^2}{K \times L^2}} = \sqrt{\frac{V^2}{K/\rho}} = \frac{V}{\sqrt{K/\rho}}$$

But $\sqrt{\frac{K}{\rho}} = C$ = Velocity of sound in the fluid

$$\therefore \quad M = \frac{V}{C}.$$

Q.84

Sol: **Types of Forces Acting in Moving Fluid**

For the fluid flow problems, the forces acting on a fluid mass may be any one, or a combination of the several of the following forces:

1. Inertia force, F_i
2. Viscous force, F_v
3. Gravity force, F_g
4. Pressure force, F_p
5. Surface tension force, F_s
6. Elastic force, F_e

1. **Inertia Force (F_i):** It is equal to the product of mass and acceleration of the flowing fluid and acts in the direction opposite to the direction of acceleration. It is always existing in the fluid flow problems.
2. **Viscous Force (F_v):** It is equal to the product of shear stress (t) due to viscosity and surface area of the flow. It is present in fluid flow problems where viscosity is having an important role to play.
3. **Gravity Force (F_g):** It is equal to the product of mass and acceleration due to gravity of the flowing fluid. It is present in case of open surface flow.
4. **Pressure Force (F_p):** It is equal to the product of pressure intensity and cross-sectional area of the flowing fluid. It is present in case of pipe-flow.
5. **Surface Tension Force (F_s):** It is equal to the product of surface tension and length of surface of the flowing fluid.
6. **Elastic force (F_e):** It is equal to the product of elastic stress and area of the flowing fluid.

For a flowing fluid, the above mentioned forces may not always be present. And also the forces, which are present in a fluid flow problem, are not of equal magnitude. There are always one or two forces which dominate the other forces. These dominating forces govern the flow of fluid.

Dynamic similarity: For dynamic similarity to exist between model and prototype, identical type of forces (viscous, pressure, elastic etc) must be parallel and must bear the same ratio at all corresponding sets of points. Dynamic parameters are force and power

$$\text{Force ratio} = \frac{F_m}{F_p} = \rho_r \times V_r \times a_r = \frac{\rho_r L_r^4}{T_r^2}$$

$$\text{Power ratio} = \frac{P_m}{P_p} = F_r . V_r = \frac{\rho_r L_r^5}{T_r^3}$$

For dynamic similarity between model and prototype, ratio of dimensionless numbers (R_e, F_e, W_e, E_u, M) should be same for model and prototype.

- But it is difficult to satisfy all the force ratios. Hence models are designed on the basis of ratio of forces which are dominating in the phenomenon.
- Thus we have various model laws depending on the forces which are dominant in the flow.

(1) Reynold's model Law

- The situation where apart from inertia force, only viscous forces are dominant, Reynold's model law is used i.e. Reynold's no. of model should be equal to Reynold's no. of prototype.

i.e, $(R_e)m = (R_e)p$

$$\frac{\rho_m V_m L_m}{\mu_m} = \frac{\rho_P V_P L_P}{\mu_P}$$

i.e.
$$\frac{\rho_r V_r L_r}{\mu_r} = 1$$

Reynold's model law is used in

- Pipe flow (where viscosity has significant effect like laminar flow).
- Flow around completely submerged objects like submarines, airplanes, automobiles
- Parachutes when there is drag (i.e. when not falling in vacuum)

Thus in this law:

(a) $V_r = \frac{\mu_r}{\rho_r L_r} =$ Velocity ratio

(b) $T_r = \frac{L_r}{V_r} = \frac{\rho_r L_r^2}{\mu_r} =$ Time ratio

(c) $a_r = \frac{V_r}{T_r} = \frac{\mu_r^2}{\rho_r^2 L_r^3} =$ Acceleration ratio

(d) $F_r = m_r \times a_r = \frac{\rho_r L_r^3 \mu_r^2}{\rho_r^2 L_r^3} = \frac{\mu_r^2}{\rho_r} =$ Force ratio

(e) $P_r = F_r \times V_r = \frac{\mu_r^3}{\rho_r^2 L_r} =$ Power ratio

(f) $Q_r = \frac{L_r^3}{T_r} = V_r \times L_r^2 = \frac{\mu_r}{\rho_r L_r} \times L_r^2 = \frac{\mu_r L_r}{\rho_r} =$ Discharge ratio

Note: If m & ρ are same then, $\frac{\rho_r L_r V_r}{\mu_r} = 1 \Rightarrow \boxed{L_r V_r = 1}$

(2) Froude's Law

The law is applicable when in addition to inertia force, gravity forces are important.

In this case, $(F_e)_m = (F_e)_P$

$$\Rightarrow \quad \frac{V_r}{\sqrt{g_r L_r}} = 1$$

If model and prototype are at same location i.e. if g is constant, then

$$\Rightarrow \quad \frac{V_r}{\sqrt{L_r}} = 1 \quad \text{(L = length parameter)}$$

L = Hydraulic depth $= \frac{A}{P}$ (in case of open channel).

Froude's law is applicable in

(a) Free surface flow such as flow over spillway, weirs, channels (open channels) hydranlic jumps.
(b) Flow of liquid jet from orifices.
(c) Flow over weir and notches.
(d) Motion of ship in rough and turbulent sea (motion resistance is due to waves formed in sea due to gravity.

Note: In case of ship, gravity as well as viscous forces both are predominant, hence Reynolds and Froude Law both should be used.

In the case

1. $V_r = \sqrt{L_r}$ = velocity ratio

2. $T_r = \frac{L_r}{V_r} = \frac{L_T}{\sqrt{L_r}} = \sqrt{L_r}$ = Time ratio

3. $a_r = \frac{V_r}{T_r} = \frac{\sqrt{L_T}}{\sqrt{L_r}} = 1$ = Acceleration ratio

4. $F_r = m_r a_r = \rho_r L_r^3 \times 1 = \rho_r L_r^3$ = Force ratio

5. $P_r = F_r \times V_r = \rho_r \times L_r^3 \times \sqrt{L_r} = \rho_r L_r^{7/2}$ = Power ratio

6. $Q_r = \frac{L_r^3}{T_r} = \frac{L_r^3}{\sqrt{L_r}} = L_r^{2.5}$ = Discharge ratio

(3) Euler's model law

When apart from inertia forces, only pressure force is dominant, this law is applicable. In this case,

$$(E_u)_m = (E_u)_p$$

$$\Rightarrow \quad \frac{V_r}{\sqrt{P_r/\rho_r}} = 1$$

This law is applicable

- In pipe flow at high presure (in which viscous effect is negligible as in turbulent flow)
- In case of cavitation.
- Pressure due to sudden closure of valve.

(4) Weber model law

When apart from inertia forces, surface tension forces is dominant.

$$(We)_m = (We)_p$$

$$\Rightarrow \quad \frac{V_r}{\sqrt{\frac{\sigma_r}{\rho_r L_r}}} = 1$$

It is applicable in

(a) Capillary rise in narrow passages.
(b) Flow over weirs for small heads.
(c) Rising bubble, seepage flow through soil.
(d) Flow of blood in veins and Arteries.

(5) Mach Law

When apart from inertia force, compressibility forces are dominant, we use Mach law.
Compressibility force are predominant when mach no $\geq$ 0.3
i.e. Speed of movement = (0.3 × Velocity of sound)
Mach no < 1 is called SubSonic
Mach no > 1 is called SuperSonic
Mach no = 1 is called Sonic
Mach no >> 1 is called HyperSonic
When Mach no < 0.3, Compressibility effect can be neglected.

In this case,

$$(M)_m = (M)_p$$

$$\Rightarrow \quad \frac{V_r}{\sqrt{k_r/\rho_r}} = 1$$

Applicable in

- Aerodynamic testing such as launching of missiles, rockets.
- Underwater testing of torpedoes.
- Water hammer pressure.
- Flow of gases through pipe at high velocity.

Q.85

Sol. Given,

(i) When water flows through the pipe

Diameter of pipe, $(d_w) = 50$ mm = 0.05 m

Velocity, $(V_w) = 0.6\ ms^{-1}$

Head loss, $(h_{fw}) = 800$ mm per 100 m length

Density, $(\rho_w) = 1000\ Kg/m^3$

Dynamic viscosity, $(\mu_a) = 0.12$ Pa-s

(ii) When air flow through the pipe

Diameter of pipe, $(d_s) = 200$ mm = 0.2 m

Density, $(\rho_a) = 1.23\ Kg/m^3$

Dynamic viscosity, $(\mu_a) = 1.8 \times 10^{-5}$ Pa-s

It is also given that both the pipes have geometrically similar roughness, which means friction factor, f would be same for both the pipes.

$$f_w = f_a$$

Since, in this case apart from inertial force, viscous force predominates, therefore Reynold's law will be applicable.

$$\Rightarrow \quad (R_e)_w = (R_e)_a$$

$$\Rightarrow \quad \frac{\rho_w V_w d_W}{\mu_w} = \frac{\rho_a V_a d_a}{\mu_a}$$

$$\Rightarrow \quad \frac{1000 \times (0.6) \times 0.05}{0.12} = \frac{1.23 \times V_a \times 0.2}{1.8 \times 10^{-5}}$$

$$\Rightarrow \quad V_a = 0.0183\ ms^{-1}$$

$\therefore$ Flow velocity of air in the pipe = $0.0183\ ms^{-1}$

Calculation of friction factor, f:

$$(h_f)_w = \frac{fL_w V_w^2}{2gd_w}$$

$$0.8 = \frac{f \times 100 \times (0.6)^2}{2 \times 9.81 \times 0.05} \qquad [(h_f)_w = 800\text{mm for } L_w = 100\text{ m}]$$

$$f = 0.0218$$

Calculation of head loss for air: (per 400 m length)

$$(h_f)_a = \frac{0.0218 \times 400 \times (0.0183)^2}{2 \times 9.81 \times 0.2} = 0.000744\,m$$

$$(h_f)_a = 0.744\,mm$$

$\therefore$ Head loss per 400 m of length = 0.7442 mm

Q.86

Sol. Since the submarine is moving far below the surface of water, it is totally submerged and hence the similarity between the model and its prototype can be established on the basis of Reynolds model law according to which

$$\left(\frac{VL}{\nu}\right)_m = \left(\frac{VL}{\nu}\right)_p$$

$$\therefore \quad V_m = V_p \times \frac{L_p}{L_m} \times \frac{\nu_m}{\nu_p}$$

$$= 8 \times 10 \times \frac{1.00 \times 10^{-6}}{1.121 \times 10^{-6}}$$

$$= 71.635 \text{ m/s}$$

$\therefore$ The ratio of the drag for the model and the prototype is

$$\frac{F_m}{F_p} = \frac{\rho_m}{\rho_p} \times \left(\frac{L_m}{L_p}\right)^2 \times \left(\frac{V_m}{V_p}\right)^2$$

$$= \frac{1000}{1027} \times \left(\frac{1}{10}\right)^2 \times \left(\frac{71.365}{8}\right)^2$$

$$= 0.775$$

If the prototype were to move close to the surface then it will be subjected to both viscous and wave resistance. Hence for complete similarity between the model and the prototype, the model will have to be tested in accordance with both Reynolds as well as Froude model laws. As such the results obtained above on the basis of model testing done in accordance with only the Reynolds model law will not be true for this case.

Q.87

Sol. The frictional loss for the flow through a pipe can be evaluated by the force balance on the control volume.

Let us assume,

Average flow velocity = V

Area of cross-section = A

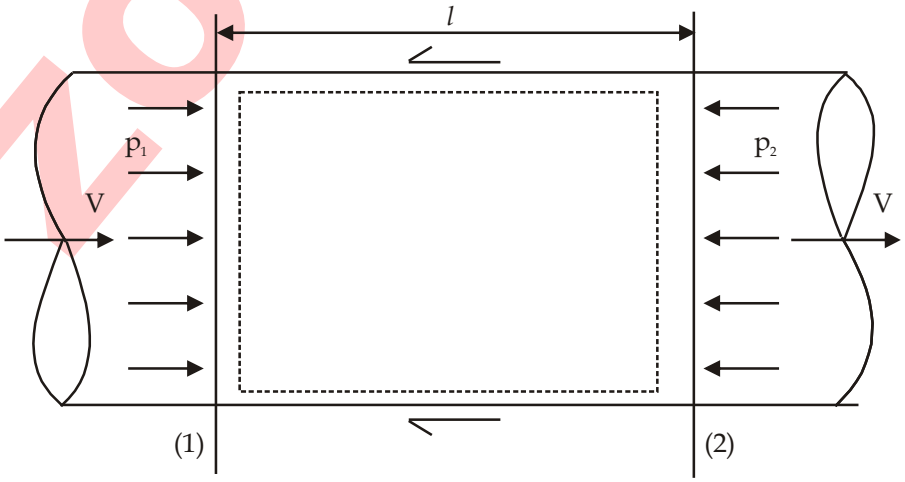

p_1 and p_2 $\rightarrow$ intensities of pressure at section (1) and (2)

Writing energy equation between section (1) and (2)

$$\frac{p_1}{\gamma}+\frac{V_1^2}{2g}+z_1=\frac{p_2}{\gamma}+\frac{V_2^2}{2g}+z_2+h_f$$

$$V_1 = V_2 \text{ and } z_1 = z_2$$

$$\Rightarrow \quad h_f=\left(\frac{p_1-p_2}{\gamma}\right) \quad ...(i)$$

$\Rightarrow$ Propelling force acting on the fluid= $(p_1 - p_2)A$

Frictional resistance force can be written as = $f'PlV^2$

Where,

P $\rightarrow$ wetted perimeter

l $\rightarrow$ distance between two chosen sections

f' $\rightarrow$ non-dimensional factor whose value depends upon the material and nature of the pipe surface

Under equilibrium conditions,

Propelling force = frictional resisting force

$$(p_1-p_2)A = f'PlV^2$$

$$h_f\gamma_w A = f'PlV^2 \quad \text{[from equation (i)]}$$

$$h_f=\frac{f'PlV^2}{\gamma_w A}$$

For circular pipe running full, $A=\frac{\pi d^2}{4}$ and $P=\pi d$

$$\Rightarrow \quad h_f=\frac{f'(\pi d)lV^2}{\gamma_w\frac{\pi d^2}{4}}=\frac{4f'lV^2}{\rho g d}=\frac{8f'}{\rho}\frac{lV^2}{2gd}$$

$$\Rightarrow \quad h_f=\frac{flV^2}{2gd} \quad \left[\text{where friction factor, } f=\frac{8f'}{\rho}\right]$$

Q.88

Sol. **Head Losses:-** When a fluid is flowing through a pipe, the fluid experiences some resistance due to which some of the energy of fluid is lost. This loss of energy is classified as

1. Major Losses
2. Minor Losses

1. **Major Losses:-** This is due to internal friction between the layers.

$$\text{Total Head}=\frac{P}{\rho g}+\frac{v^2}{2g}+z$$

Darcy-Weisbach formula :-

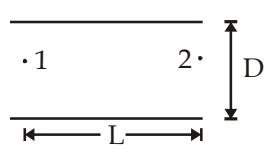

$$h_f=\frac{fLV^2}{2gD} \quad .....(i)$$

Where

V = Average velocity

f = Friction factor

f = 4f'

f' = Coefficient of friction

This equation is applicable for laminar or turbulent flow, horizontal, inclined or vertical pipes but the flow must be steady.

Coefficient of friction

	For laminar flow	For Turbulent Flow
	$f' = \frac{16}{Re}$	$f' = \frac{0.079}{(Re)^{1/4}}$
$\because$	$f = 4f' \Rightarrow f = \frac{64}{Re}$	

2. Minor Losses:-

(i) Losses due to sudden expansion.

(ii) Losses due to exit.

(iii) Losses due to sudden contraction.

(iv) Losses due to entry.

(v) Losses due to bend in pipe.

(i) Losses due to sudden expansion:-

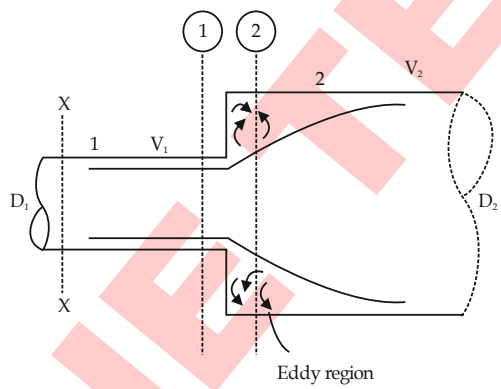

Assumption:

The pressure in the eddy region is assumed to be equal to upstream pressure.

$$h_{Lexp} = \frac{(V_1 - V_2)^2}{2g}$$

In deriving this equation Bernoulli's equation, momentum equation and continuity equations are used.

$$h_{Lexp} = \frac{V_1^2}{2g}\left[1 - \frac{V_2}{V_1}\right]^2$$

$$A_1V_1 = A_2V_2$$

$$\frac{V_2}{V_1} = \frac{A_1}{A_2}$$

$$h_{Lexp} = \frac{V_1^2}{2g}\left[1 - \frac{A_1}{A_2}\right]^2$$

(ii) **Due to exit:-** It is similar to sudden expansion with A_2 is infinite.

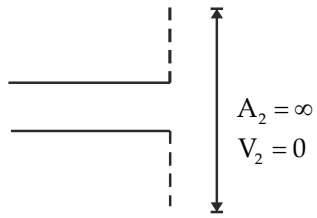

$$h_L = \frac{(V_1 - V_2)^2}{2g}$$

$$h_L = \frac{V^2}{2g}$$

(iii) **Due to sudden contraction:-**

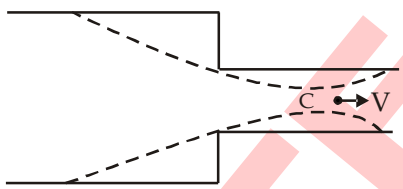

$$h_L = \frac{(V_c - V)^2}{2g}$$

From continuity equation

$$A_c V_c = AV$$

$$\frac{A_c}{A} = \frac{V}{V_c}$$

$\because$ $$\frac{A_c}{A} = C_c \text{ (Coefficient of contraction)}$$

$\therefore$ $$\frac{V}{V_c} = C_c \Rightarrow V_c = \frac{V}{V_c}$$

then $$h_L = \frac{\left(\frac{V}{C_c} - V\right)^2}{2g}$$

$$h_L = \frac{V^2}{2g}\left(\frac{1}{C_c} - 1\right)^2$$

$\Rightarrow$ If the coefficient of contraction C_c is not given then sudden contraction losses are taken as

$$h_{cont} = \frac{0.5V^2}{2g}$$

Where V = velocity in smaller diameter pipe.

(iv) **Due to entry:-** It is similar to sudden contraction

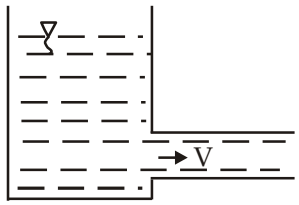

$\therefore$ $$h_L = \frac{0.5V^2}{2g}$$

(v) **Due to pipe bend:-**

$$h_L = \frac{KV^2}{2g}$$ K = coefficient of pipe bend

Effect of K:-

(I) **Dia:-**

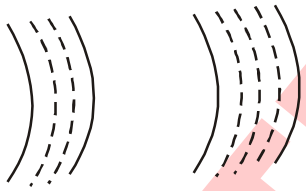

$D\uparrow = K\downarrow$

(II) **Angle**

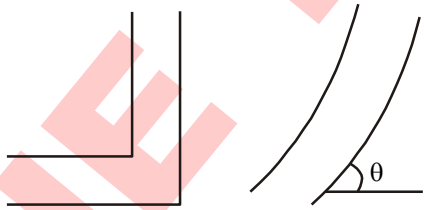

$\theta\uparrow = K\uparrow$

(III) **Radius of curvature (R_c):-**

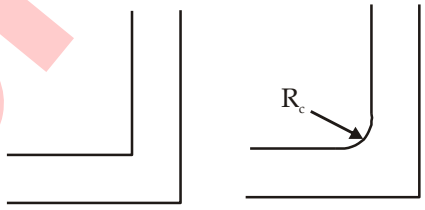

$R_c\uparrow = K\downarrow$

Q.89

Sol. **Total energy line:-**

- It is a line joining the point representing the value of total head at various cross section of pipe in pipe flow.
- These lines always go down in the direction of flow until or unless some energy supplied externally. Ex:- pump.

Hydraulic gradient line:-

- It is the line joining the point representing the value of piezometric head at the various cross section of pipe in pipe flow.
- These line may go up or down in direction of flow.
- These line always below the total energy line.
- In a uniform diameter pipe hydraulic gradient line always parallel to total energy line and vertical gap between the two line at any section of pipe represent the value of kinetic head.

ZONE TECH

Pipes in Series connection

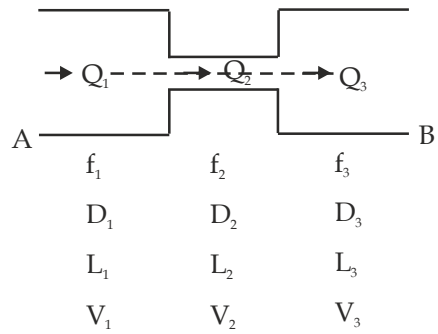

$$Q_1 = Q_2 = Q_3 = Q \rightarrow \text{Remain constant}$$

$$h_{f_{AB}} = h_{f_1} + h_{f_2} + h_{f_3}$$

Pipes in Parallel connection

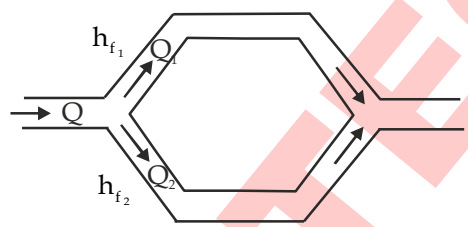

$$Q = Q_1 + Q_2$$

$$h_{f_1} = h_{f_2} \rightarrow \text{Remain constant}$$

- In parallel connection as the ends of pipes are connected between same points therefore the energy loss is same for all parallel pipes.

Equivalent Pipe:- A pipe of uniform diameter is said to be equivalent to a compound pipe when the discharge and head losses are same in both pipes.

For in Series Connection:-

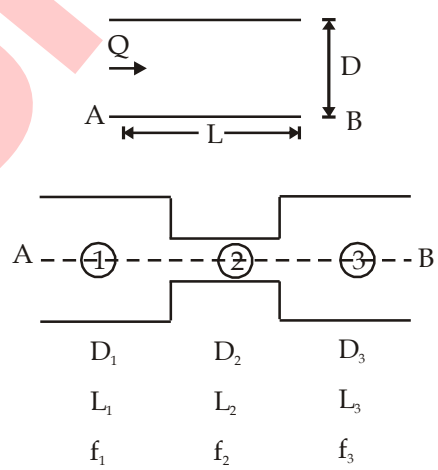

$$\frac{L_{eq}}{D_{eq}^5} = \frac{L_1}{D_1^5} + \frac{L_2}{D_2^5} + \frac{L_3}{D_3^5}$$

This is known as dupuit's equation, in Dupuit's equation minor losses are neglected.

For Parallel Connection:- Discharge is increasing but head loss for each pipe is same.

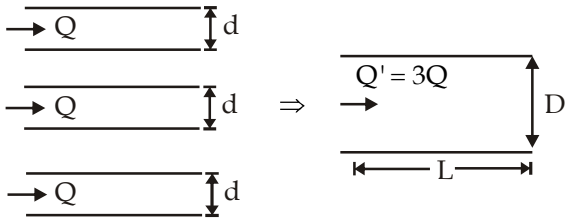

$$Q' = Q + Q + Q = 3Q$$

Relation between D and d

We know that in parallel connection

$$h_f = h_{f_{eq}} \Rightarrow \frac{fLQ^2}{12d^5} = \frac{fL(3Q)^2}{12D^5}$$

$$D^5 = 9d^5$$

$$D = (3^2)^{1/5}d$$

$$D = 1.55d$$

If number of pipe are 'n'

$$D_{eq} = (n)^{2/5}d$$

Q.90

Sol. **Compound pipe :-** A compound pipe is a pipeline made by connecting two or more pipes of different diameters or materials in series, end to end to convey fluid. In such a system, the discharge remains constant, but the head loss is the sum of losses in each pipe section.

(a) **For Series Connection:-**

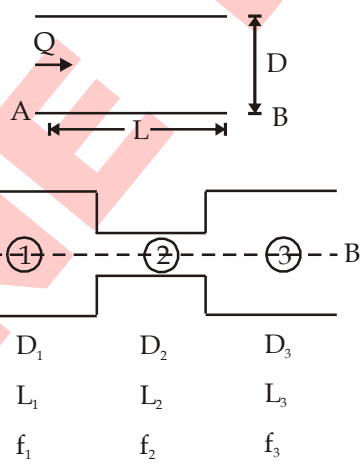

$$h_{f_{eq}} = h_{f_1} + h_{f_2} + h_{f_3}$$

$$\frac{fL_{eq}Q^2}{12D_{eq}^5} = \frac{f_1L_1Q^2}{12D_1^5} + \frac{f_2L_2Q^2}{12D_2^5} + \frac{f_3L_3Q^2}{12D_3^5}$$

$$\frac{fL_{eq}}{D_{eq}^5} = \frac{f_1L_1}{D_1^5} + \frac{f_2L_2}{D_2^5} + \frac{f_3L_3}{D_3^5}$$

If $f_1 = f_2 = f_3 = f$

$$\frac{L_{eq}}{D_{eq}^5} = \frac{L_1}{D_1^5} + \frac{L_2}{D_2^5} + \frac{L_3}{D_3^5}$$

This is known as dupuit's equation, in Dupuit's equation minor losses are neglected.

ZONE TECH

(b) According to question three pipes of the same length L, diameter D and friction factor f are considered in parallel.

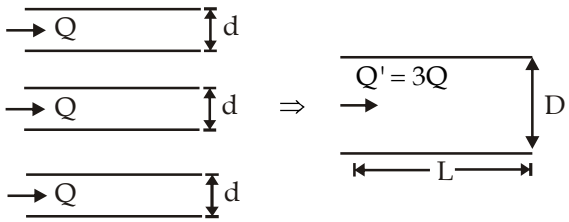

$$Q' = Q + Q + Q = 3Q$$

Relation between D and d

We know that in parallel connection

$$h_f = h_{f_{eq}} \Rightarrow \frac{fLQ^2}{12d^5} = \frac{fL(3Q)^2}{12D^5}$$

$$D^5 = 9d^5$$

$$D = (3^2)^{1/5}d$$

$$D = 1.55d$$

If number of pipe are 'n'

$$D_{eq} = (n)^{2/5}d$$

Q.91

Sol. Given:

Length of pipe, $L = 2000$ m

Power transmitted $P = 110.3625$ kW

Pressure at inlet, $p = 490.5\ N/cm^2 = 490.5 \times 10^4\ N/m^2$

∴ Pressure head at inlet, $H = \frac{p}{\rho g} = \frac{490.5 \times 10^4}{1000 \times 9.81} = 500$ m $[\because \rho = 1000\ kg/m^3]$

Pressure drop $\Delta p = 98.1\ N/cm^2 = 98.1 \times 10^4\ N/m^2$

∴ Loss of head, $h_f = \frac{98.1 \times 10^4}{\rho g} = \frac{98.1 \times 10^4}{1000 \times 9.81} = 100$ m

Co=efficient of friction, $f = .0065$

Head available at the end of the pipe, $h = H - h_f = 500 - 100 = 400$ m

Let the diameter of the pipe = d

Now power transmitted is given by, $P = \frac{\rho g \times Q \times (H - h_f)}{1000}$ kW

or $110.3625 = \frac{1000 \times 9.81 \times Q \times 400}{1000}$

∴ $Q = \frac{110.3625 \times 1000}{1000 \times 9.81 \times 400} = 0.02812\ m^3/s$

But Discharge, Q = Area × Velocity $= \frac{\pi}{4}d^2 \times V$

∴ $\frac{\pi}{4}d^2 \times V = .02812$

∴ $V = \frac{.02812 \times 4}{\pi d^2} = \frac{0.0358}{d^2}$

The head lost due to friction, $h_f = \frac{4f \times L \times V^2}{d \times 2g}$

But $h_f = 100$ m

$\therefore$ $100 = \frac{4 \times f \times L \times V^2}{d \times 2g} = \frac{4 \times .0065 \times 2000 \times V^2}{d \times 2 \times 9.81}$

$$100 = \frac{2.65 \times V^2}{d}$$

$\therefore$ From equation (i), $V = \frac{.0358}{d^2}$

Hence $100 = \frac{2.65 \times V^2}{d} = \frac{2.65}{d} \times \left(\frac{.0358}{d^2}\right)^2 = \frac{.003396}{d^5}$

$\therefore$ $100 = \frac{.003396}{d^5}$

or $d = \left(\frac{.003396}{100}\right)^{1/5} = 0.1277 \text{ m} = 127.7 \text{ mm.}$

Now efficiency of power transmission is given by

$$\eta = \frac{H - h_f}{H} = \frac{500 - 100}{500} = 0.80 = 80\%$$

Q.92

Sol. **Case-l:** When single pipe is laid

Diameter of pipe = 600 mm

Head loss (h_L) = 20 m

Let the length of this pipe be 'L' and friction factor be 'f', and the discharge be 'Q'

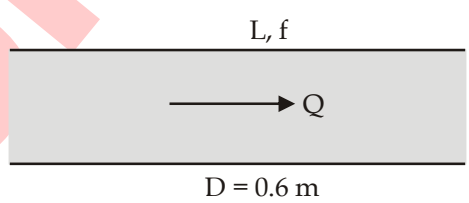

As per Darcy weisbach equation,

$$h_L = \frac{flQ^2}{12.1D^5} \Rightarrow 20 = \frac{fLQ^2}{12.1(0.6)^5}$$

$\Rightarrow$ $fLQ^2 = 18.82$ ... (i)

Case II: When two pipes are laid parallel to each other

Let the diameter of the additional pipe be D'. The friction factor and length of this pipe are same as that of existing one.

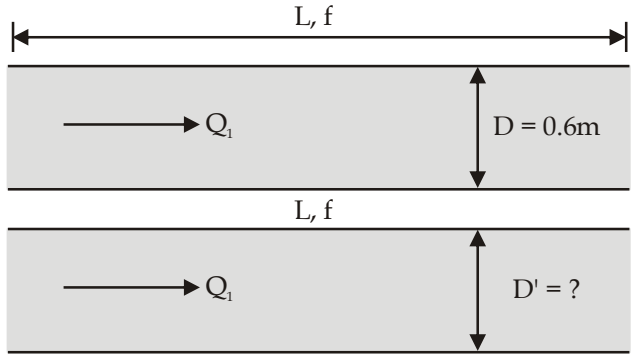

This combination delivers the same discharge as that of the previous case:

$\Rightarrow$ $$Q = Q_1 + Q_2$$

Also, $$h_{f_1} = h_{f_2} = 10m$$

For pipe 1:

$$h_{f_1} = \frac{fLQ_1^2}{12.1D^5} \Rightarrow \frac{fLQ_1^2}{12.1(0.6)^5}$$

$\Rightarrow$ $$fLQ_1^2 = 9.41 \quad ...(iii)$$

$\Rightarrow$ (i) ÷ (iii), we get

$$\frac{Q^2}{Q_1^2} = \frac{18.82}{9.41} \Rightarrow Q_1 = 0.707Q \quad ...(iv)$$

From equation (ii) we have $Q_2 = Q - Q_1$

$\Rightarrow$ $$Q_2 = Q - 0.707Q \Rightarrow Q_2 = 0.293Q \quad ...(v)$$

Also, $$h_{f_2} = 10 = \frac{fLQ_2^2}{12.1D^5} \Rightarrow fLQ_2^2 = 121D'^5$$

$\Rightarrow$ $$fL(0.293Q)^2 = 121D'^5$$

$\Rightarrow$ $$flQ^2 \times (0.293)^2 = 121D'^5 \quad (fLQ^2 = 18.82, \text{ from(i)})$$

$\Rightarrow$ $$18.82 \times (0.293)^2 = 121D'^5$$

$$D' = 0.4218m$$

$\therefore$ Diameter of additional pipe = 421.8 mm

Q.93

Sol:

Given, Dia of pipe = 0.2 m

Length of pipe = 4000 m

Difference in water level (H) = 40 m

Coefficient of friction (f) = 0.00625

1st case: When single pipe connects the two reservoir

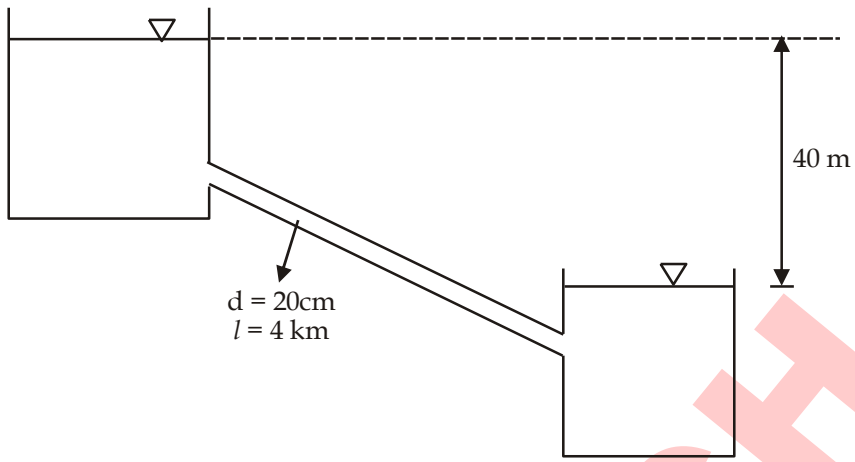

$$H = 40 \text{ m} = \frac{flQ_1^2}{12.1d^5} \text{ (neglecting minor losses)}$$

$$Q_1 = \sqrt{\frac{12.1Hd^5}{fl}} = 0.0787 \text{m}^3/\text{sec}$$

2nd case: When another pipe is laid parallel from the upper reservoir to the midpoint of original pipe.

Length of pipe BD = 2000 m; and dia = 0.2 m

Length of pipe CD = 2000 m; and dia = 0.2 m

Length of pipe DE = 2000 m; and dia = 0.2 m

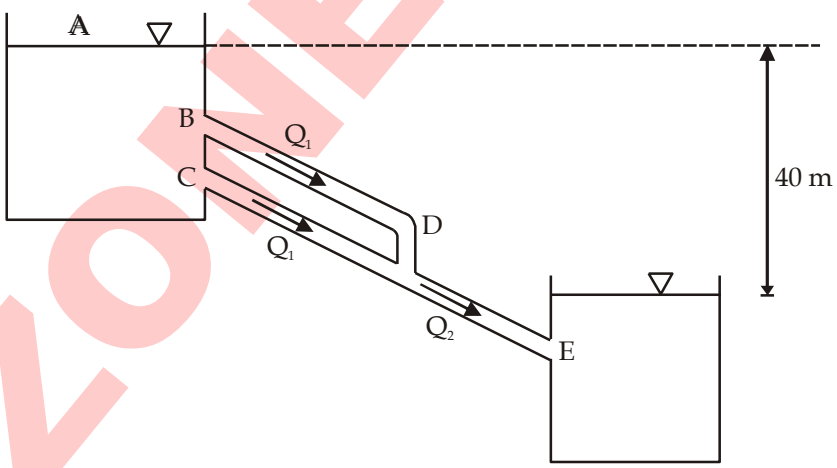

$$\boxed{Q_2 = 2Q_1}$$

$$H = 40 = \frac{0.00625 \times 2000 \times \left(\frac{Q_2}{2}\right)^2}{12.1 \times (0.2)^5} + \frac{0.00625 \times 2000 \times Q_2^2}{12.1 \times (0.2)^5}$$

$$Q_2 = 0.0995 \text{ m}^3/\text{sec}$$

Hence, increase in discharge due to installation of the new pipe = (0.0995 – 0.0787) = 0.0208 m^3/s.

Q.94

Sol:

Given :

Darcy friction factor, f = 0.02

Length of both pipes AC and CB i.e. L = 100 m (Let Junction point is denoted by C)

Let the flow rate from reservoir A be Q m^3/sec

Neglecting the losses at entrance and at the junction,

10 = frictional head loss in AC + Frictional head loss in CB

$$\text{Frictional head loss, } h_f = \frac{flv^2}{2gd} = \frac{fl\left(\frac{4Q}{\pi d^2}\right)}{2gd} = \frac{flQ^2}{12.1d^5}$$

$$10 = \frac{fLQ^2}{12.1d_1^5} + \frac{fL(Q-0.02)^2}{12.1d_2^5}$$

$$10 = \frac{0.02\times 100Q^2}{12.1\times(0.3)^5} + \frac{0.02\times 100(Q-0.02)^2}{12.1\times(0.25)^5}$$

$$= 68.02Q^2 + 169.26\left(Q^2 + 4\times 10^{-4} - 0.04Q\right)$$

$$10 = 237.28Q^2 + 0.0677 - 6.77Q$$

$$237.28Q^2 - 6.77Q - 9.9323 = 0$$

$$\Rightarrow \quad Q = 0.219\ m^3/sec$$

$\therefore$ Total water withdrawal from reservoir A = 0.219 m^3/sec

Q.95

Sol.

(i) **Laminar flow through pipe (Hagen-Poiseuille flow):-** Consider a horizontal pipe of radius R. The viscous fluid is flowing from left to right in the pipe as shown in figure. Consider a fluid element of radius r, sliding in a cylindrical fluid element of radius (r + dr). Let the length of fluid element be dx.

Assumption:

(1) Steady flow

(2) Fully developed flow

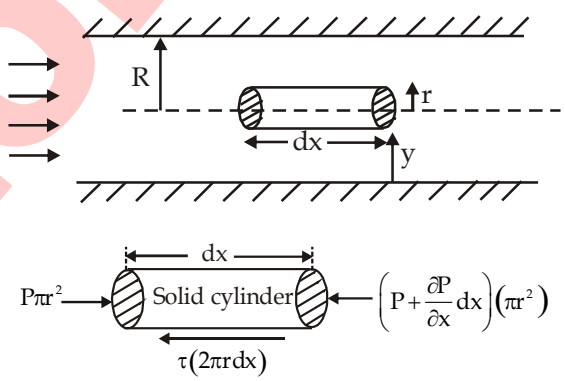

Momentum Equation in X-direction

$$\rho\pi r^2 - \left(P + \frac{\partial p}{\partial x}dx\right)\pi r^2 - \tau(2\pi r dx) = dma_x$$

No change in a_x due to uniform cross section and laminar flow ($a_x = 0$)

$$\left[\frac{-\partial P}{\partial x}dx\right]\pi r^2 = \tau\, 2\pi r dx$$

$$\tau = \frac{-r}{2}\frac{\partial P}{\partial x} \qquad .....(1)$$

For fully developed flow

$$\frac{\partial P}{\partial x} = \text{constant}$$

Velocity Profile:-

For newtonian fluid $\tau = \mu\frac{du}{dy}$ .....(2)

By equation (1) and (2)

$$\mu\frac{du}{dy} = \frac{-r}{2}\frac{\partial P}{\partial x}$$

$$\frac{\partial u}{\partial y} = \frac{-r}{2\mu}\frac{\partial P}{\partial x}$$

$$y + r = R$$

$$dy + dr = 0$$

$$dy = -\,dr$$

$$\frac{-\partial u}{\partial r} = \frac{-r}{2\mu}\frac{\partial P}{\partial x}$$

Integrate it

$$u = \frac{r^2}{4\mu}\frac{\partial P}{\partial x} + C$$

Apply Boundary condition

At $r = R,\ u = 0$

$$C = -\frac{R^2}{4\mu}\frac{\partial P}{\partial x}$$

$$u = \frac{r^2}{4\mu}\frac{\partial P}{\partial x} - \frac{R^2}{4\mu}\frac{\partial P}{\partial x}$$

$$u = -\frac{1}{4\mu}\frac{\partial P}{\partial x}\left(R^2 - r^2\right)$$

$$u = -\frac{R^2}{4\mu}\frac{\partial P}{\partial x}\left[1 - \left(\frac{r}{R}\right)^2\right]$$

Hence we can say velocity profile is of parabolic profile.

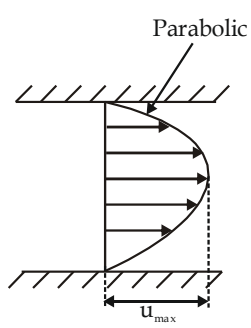

Mean velocity:-

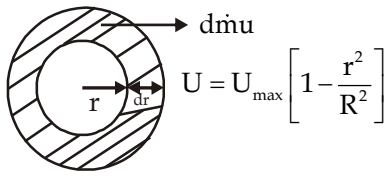

$$\dot{m} = \int d\dot{m}$$

$$d\dot{m} = \rho(dA)u$$

$$= \rho(2\pi r dr)u$$

$$\dot{m} = \int_0^R d\dot{m}$$

$$\rho(\pi R^2)u_{mean} = \int_0^R \rho(2\pi r dr)u$$

$$U_{mean} = \frac{2}{R^2}\int_0^R u r dr$$

$$U_{mean} = \frac{2}{R^2}\int_0^R U_{max}\left[1-\left(\frac{r}{R}\right)^2\right] r\,dr$$

$$U_{mean} = \frac{2U_{max}}{R^2}\int_0^R \left[r-\left(\frac{r^3}{R^2}\right)\right]dr$$

$$U_{mean} = \frac{2U_{max}}{R^2}\left[\frac{R^2}{2}-\frac{R^2}{4}\right]$$

$$U_{mean} = \frac{2U_{max}}{R^2}\left(\frac{R^2}{4}\right)$$

$$U_{mean} = \frac{U_{max}}{2}$$

$$U_{mean} = -\frac{R^2}{8\mu}\frac{\partial P}{\partial x}$$

(ii) **Flow in between parallel flat plates:-** Consider two parallel fixed plates kept at a distance 'H' apart as shown in figure. A viscous fluid is flowing between these two plates from left to right. Consider a fluid element of length dx and thickness dy at a distance y from the lower fixed plate.

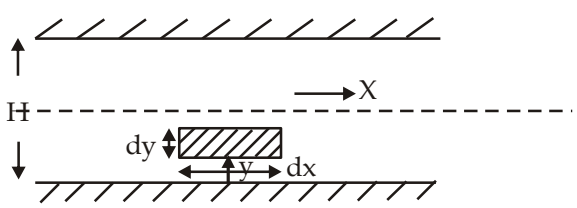

Width = 1

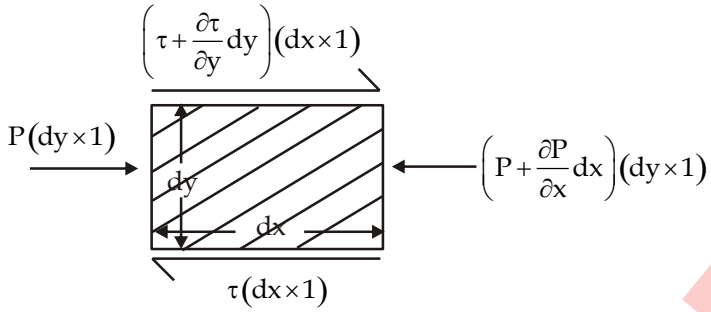

Momentum Equation in X-direction

$$F_{PX} + F_{GX} + F_{VX} = F_{iX}$$

$$Pdy - \left(P+\frac{\partial P}{\partial x}dx\right)dy - \tau dx + \left(\tau+\frac{\partial\tau}{\partial y}dy\right)dx = dm.a_x$$

No change in a_x due to uniform cross section and laminar flow $\Rightarrow a_x = 0$

$$-\frac{\partial P}{\partial x}dxdy + \frac{\partial\tau}{\partial y}dydx = 0$$

$$\frac{\partial P}{\partial x} = \frac{\partial\tau}{\partial y}$$

The pressure gradient in the flow direction is equal to shear gradient in the perpendicular direction. For Newtonian Fluids

$$\tau = \mu\frac{du}{dy}$$

$$\frac{\partial}{\partial y}\left(\mu\frac{\partial u}{\partial y}\right) = \frac{\partial P}{\partial x}$$

$$\mu\frac{\partial^2 u}{\partial y^2} = \frac{\partial P}{\partial x}$$

$$\frac{\partial^2 u}{\partial y^2} = \frac{1}{\mu}\frac{\partial P}{\partial x}$$

Integrate it

$$\frac{\partial u}{\partial y} = \frac{1}{\mu}\frac{\partial P}{\partial x}y + C_1$$

Again Integrate it

$$u = \frac{1}{\mu}\frac{\partial P}{\partial x}\frac{y^2}{2} + C_1 y + C_2 \qquad .....(1)$$

Apply Boundary conditions:-

at $y = 0,\ u = 0$

$C_2 = 0$

at $y = H,\ u = 0$

$$C_1 H = \frac{-1}{\mu}\frac{\partial P}{\partial x}\frac{H^2}{2}$$

$$C_1 = \frac{-1}{\mu}\frac{\partial P}{\partial x}\frac{H}{2}$$

$$u = \frac{1}{\mu}\frac{\partial P}{\partial x}.\frac{y^2}{2} - \frac{1}{\mu}\frac{H}{2}y\frac{\partial P}{\partial x}$$

$$u = \frac{1}{2\mu}\frac{\partial P}{\partial x}\left[y^2 - Hy\right]$$

$$u = -\frac{1}{2\mu}\frac{\partial P}{\partial x}\left[Hy - y^2\right]$$

Hence we can say velocity profile is parabolic.

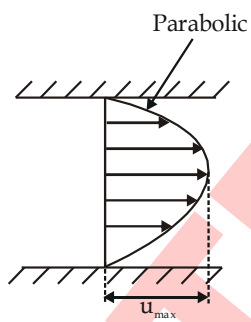

Mean velocity:- (Mass flow rate same at this velocity)

$$\dot{m} = \int_0^H d\dot{m}$$

$$\dot{m} = \int_0^H \rho(dy \times 1)u$$

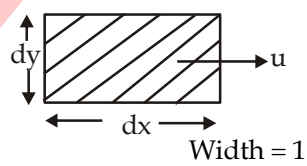

$$\rho(H \times 1)\,U_{mean} = \int_0^H \rho\left[\frac{-1}{2\mu}\frac{\partial P}{\partial x}\left(Hy - y^2\right)\right]dy$$

$$H\,U_{mean} = \frac{-1}{2\mu}\frac{\partial P}{\partial x}\int_0^H \left(Hy - y^2\right)dy$$

$$H.\,U_{mean} = \frac{-1}{2\mu}\frac{\partial P}{\partial x} \times \left[\frac{H^3}{2} - \frac{H^3}{3}\right]$$

$$H.\,U_{mean} = \frac{-1}{2\mu}\frac{\partial P}{\partial x}\frac{H^3}{6}$$

$$U_{mean} = \frac{-H^2}{12\mu}\frac{\partial P}{\partial x} = \frac{U_{max}}{1.5}$$

$$\Rightarrow \qquad U_{max} = 1.5\,U_{mean}$$

Q.96

Sol.

Data given

$$\mu = 8P = 0.8\frac{N.Sec}{m^2},$$

S.G = 1.2,

D = 80 mm = 80 × 10^{-3}m,

L = 100m,

$P_1 - P_2 = 1500$ kN/m²

∴ We have $\left(\frac{-\partial P}{\partial x}\right) = \frac{1500\times1000}{100} = 15000$ N/m²/m.

(i) Average velocity, $V_{avg} = \frac{R^2}{8\mu}\left(\frac{-\partial P}{\partial x}\right)$

$$= \frac{\left(40\times10^{-3}\right)}{\left(8\times0.8\right)}\times15000$$

= 3.75 m/sec.

∴ Discharge, $Q = \left(\frac{\pi}{4}D^2V_{avg}\right)$

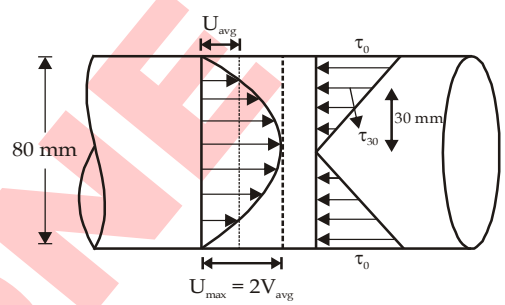

$$= \frac{\pi}{4}\times\left(80\times10^{-3}\right)^2\times3.75$$

= 0.01884 m³/sec.

= 18.85 *l*/sec.

= 1131 *l*.p.m.

(ii) Maximum velocity, U_{max} = 2 Vavg = 2 × 3.75 = 7.5 m/sec.

(iii) Wall shear stress

$$\tau_0 = \left(\frac{-\partial P}{\partial x}\right)\times\left(\frac{R}{2}\right) = 15000\times\frac{40\times10^{-3}}{2} = 300 \text{ N/m}^2$$

∴ Total frictional drag for 100 m length

= $\tau_0 \times \pi$ DL = (300 × π × 80×10^{-3}×100)

F_D = 7539.8 N

F_D = 7.54 kN

(iv) Power required to maintain the flow,

$$P = F_D \times V_{avg} = (7.54 \times 3.75)$$
$$= 28.275 \text{ kW.}$$

(v) $\tau_0 = \mu\left(\frac{\partial u}{\partial y}\right)_{y=0}$

$\therefore$ Velocity gradient at the pipe wall $\left(\frac{\partial u}{\partial y}\right)_{y=0} = \left(\frac{\tau_0}{\mu}\right)$

$$= \left(\frac{300}{0.8}\right) = 375 \text{ sec}^{-1}$$

(vi) The velocity and shear stress at 10 mm from the pipe wall means 40 – 10 = 30 mm from centre of pipe or at r = 30 mm is

$$\tau_{30} = \tau_0 \times \frac{30}{40} = \tau_0 \times \frac{3}{4}$$

$$\therefore \quad \tau_{30} = \frac{300 \times 3}{4} = 225 \text{ N/m}^2$$

$$\therefore \quad u_{30} = U_{max}\left[1 - \left(\frac{r}{R}\right)^2\right] = 7.5\left[1 - \left(\frac{30}{40}\right)^2\right]$$

$$u_{30} = \frac{7.5 \times 7}{16} = 3.28 \text{ m/sec}$$

Q.97

Sol. **Separation of Boundary Layer:** When a solid body is immeresed in a flowing fluid, a thin layer of fluid called the boundary layer is formed adjacent to the solid body. In this thin layer of fluid, the velocity varies from zero to free-stream velocity in the direction normal to the solid body. Along the length of the solid body, the thickness of the boundary layer increases. The fluid layer adjacent to the solid surface has to do work against surface friction at the expense of its kinetic energy. This loss of the kinetic energy is recovered from the immediate fluid layer in contact with the layer adjacent to solid surface through momentum exchange process. Thus the velocity of the layer goes on decreasing. Along the length of the solid body, at a certain point a stage may come when the boundary layer may not be able toe keep sticking to the solid body if it cannot provide kinetic energy to overcome the resistacne offered by the solid body. In other word, the boundary layer will be separated from the surface. This phenomenon is called the boundary layer separation. The point on the body at which the boundary layer is on the verge of separation from the surface is called point of separation.

Method of Preventing the Separation of Boundary Layer:- When the boundary layer separates from the surface as shown in figure at point S, a certain portion adjacent to the surface has a back flow and eddies are continuously formed in this region and hence continuous loss of energy takes place, this separation of boundary layer is undesirable and attempts should be made to avoid separation by various methods. The following are the methods for preventing the separation of boundary layer:

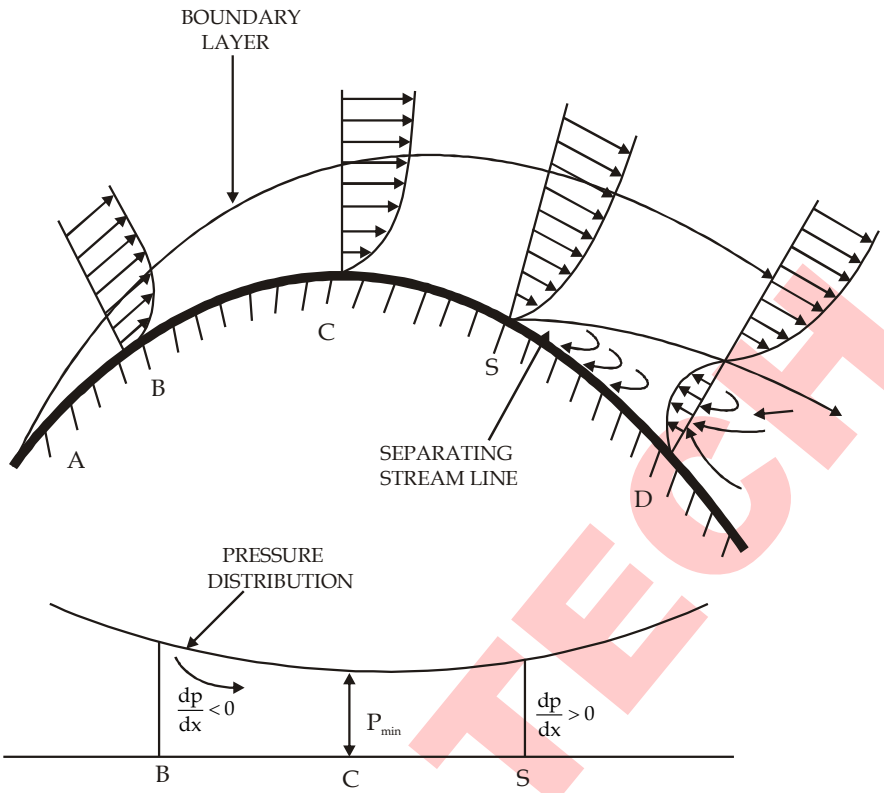

- Suction of the slow moving fluid by a suction slot.
- Supplying additional energy from a blower.
- Providing a bypass in the slotted wing.
- Rotating boundary in the direction of flow.
- Providing small divergence in a diffuser.
- Providing guide-blades in a bend.
- Providing a trip-wire ring in the laminar region for the flow over a sphere.

ZONE TECH