ZONE TECH

www.zonetech.in

ZONE TECH

Best Institute For Assistant & Junior Engineer

CIVIL ENGINEERING

E-Book

for

(Degree Students)

CE

B.Tech

RCC

Reinforcement Cement Concrete

SSC-JE
STAFF SELECTION COMMISSION-JE

RRB-JE
RAILWAY RECRUITMENT BOARD-JE

State-AE/JE
STATE LEVEL EXAMINATIONS

PSUs
PUBLIC SECTOR EXAMINATIONS

CONTACT US: **ZONE TECH**

H.O.: M-28, Madhuban Colony, Near Tonk Bridge, Tonk Phatak, Jaipur

B.O.: F-26/A, Behind Pinkcity Honda Showroom, Gatta Stand, Tonk Road, Jaipur

+91-9828747676
+91-9462447676

www.zonetech.in
www.onlinezonetech.in
info@zonetech.in

CHAPTER - 1
(INTRODUCTION)

→ **Introduction**
- » Cement
- » Cement + Water → Cement paste
- » Cement + Water + F.A. → Mortar
- » Cement + Water + F.A. + C.A → Concrete
- » Concrete + Reinforcement → R.C.C.

→ **Cement Concrete :-** Cement concrete is a composite mixture which is obtained by artificial hardening of cement, sand (Fine aggregate), coarse aggregate, water and sometimes admixture in an appropriate proportion in order to achieve desired strength.

→ **Strength Depends Upon**
- » Property and quality of material
- » Mixing pattern, compaction and curing
- » Time between mixing and placing

→ Cement concrete is a brittle material and for brittle material
Tensile strength < Shear strength < Compressive strength

→ Since cement concrete is weak in tension hence in order to resist tensile load, it is reinforced with a ductile material for which tensile strength is approximately equal to compressive strength.
For ductile material.
Tensile strength ≃ Compressive strength < Shear strength

→ Steel is generally used as reinforcement of cement concrete because it's thermal coefficient of expansion is approximately equal to that of concrete.

→ **Different Grade of Concrete :-** As per IS : 456 : 2000, following grades of concrete are available.

S.No.	Concrete	Grade	Use of concrete
1	Ordinary concrete	M10 to M20	Lean concrete
			Minimum grade of concrete for RCC is M20
2	Standard concrete	M25 to M60	RCC work and
			Pre-stressed concrete
3	High strength concrete	M65 to M100	Pre-stressed concrete
			Very high strength work

ZONE TECH

→ **Minimum Grade of Concrete :-** As per IS : 456-2000, minimum grade of concrete used in various work is as follows.

Nominal Mix	→	M5 - M20
Plain Mix	→	M15 - M25
R.C.C.	→	M20 - M40
Post tensioning	→	M30
Pre-tensioning	→	M40
Under sea water	→	M30
In foundation	→	M35

Note :- Since all the above grade of concrete is represented by a letter and a number like : MX, where

M → Design mixture (As per amendment - 4)

X → Characteristics compressive strength of concrete cube at the age of 28 days in N/mm^2 or MPa.

→ **Characteristics Compressive Strength of Concrete Cube :-** It is the strength which is to be possessed at the age of 28 days. or

It is that strength below which not more than 5% of test results are expected to fail.

Ex. :- 100 concrete cubes are tested under uniaxial compression gives the following results arranged in increasing order.

25,	26,	26.5,	27,	27.5
28,	28.5,	29,	30,	30.5
31, _____				

Now, according to definition, 28 N/mm^2 is the strength below which only 5% sample are failed. Hence f_{ck} must be 28 N/mm^2.

Since f_{ck} is always represented in of multiple of '5' hence either 25 N/mm^2 or 30 N/mm^2 must be f_{ck}.

In this case, 8 samples (more than 5%) are below 30 N/mm^2, so 30 N/mm^2 can not be f_{ck}.

Now, 25 N/mm^2 can be considered as f_{ck} because zero test result (less than 5%) is below 25 N/mm^2

$$f_{ck} = 25\ N/mm^2$$

→ **Characteristics Compressive Strength of Concrete :-** It is obtained by dividing characteristics compressive strength of cube by a factor 1.5 to account for variation in shape of concrete (other than cube) and variation in loading condition (other than uniaxial compression)

Note :- Factor 1.5 used here is not partial F.O.S.

→ In general conversation, characteristics strength of concrete represent value obtained from characteristics strength of cube.

Comparison between cylinder and cube :-

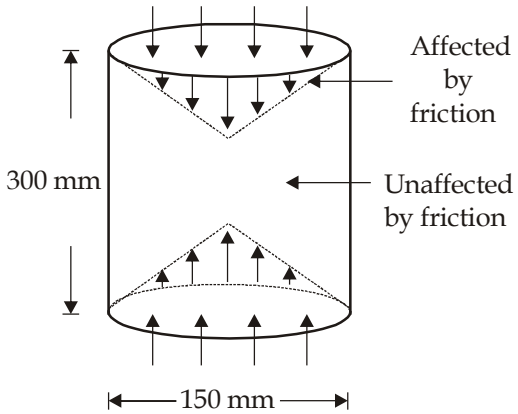

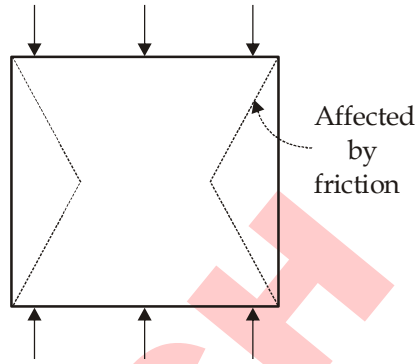

	Cylinder	Cube
What should be used	√	×
Actually used	×	√

Uniaxial compression strength of concrete can be determined by any shape. (cube, cylinder, prism etc).

Cube dimension	Size of aggregate	Cylinder dimension
150 × 150 × 150	aggregate ≥ 19 mm	150 × 300
100 × 100 × 100	aggregate < 19 mm	100 × 200

- Cylinder gives more appropriate result for uniaxial compressive strength because effect of friction between machine plates and specimen is almost zero.

$$f_{cube} = 1.25 f_{cylinder}$$

- Cube or cylinder of smaller size gives higher strength as compared to standard size.

Probability Distribution Curve :-

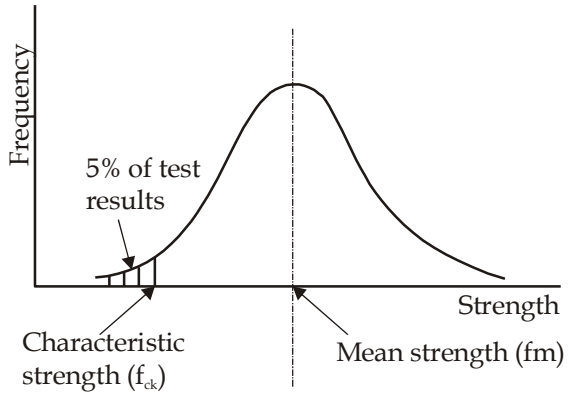

ZONE TECH

Mean Strength of Concrete (f_m) :- It is that strength below which not more than 50% of the test result are expected to fail.

Mathematically

$$f_m = f_{ck} + 1.65\ \sigma$$

$$\sigma = \text{Standard deviation}$$

$$= \sqrt{\text{Variance}}$$

$$= \sqrt{\frac{\Sigma(\bar{x} - x_1)^2}{n-1}}$$

Values of standard deviation (σ)

Grade	M10 to M15	M20 to M25	M30 and above
σ	$3.50\,N/mm^2$	$4.0\,M/mm^2$	$5.0\,N/mm^2$

→ **Acceptance Criteria of Concrete :-**

According to code IS 456 : 2000 clause 1.2.12.1 :- Acceptance criteria of sample

Specimen → 1 cube

Sample → Set of 3 cubes casted from same concrete at same time

Quantity of Concrete	No. of Sample
1 - 5 m^3	1
6 - 15 m^3	2
16 - 30 m^3	3
31 - 50 m^3	4
51 - above	4 + 1 sample for each additional 50 m^3.

→ As per IS 456 : 2000, Concrete can be accepted if

(a) For all concrete greater than M15 grade and above, the average strength of four non-overlapping consecutive samples shall not be less than maximum of following.

$$f_{avg.} \geq \text{Maximum of} \begin{cases} (f_{ck} + 0.825\sigma)\,N/mm^2 \left(\text{Rounded to nearest } 0.5\,N/mm^2\right) \\ f_{ck} + 3\ N/mm^2 \end{cases}$$

(b) Individual test result of any sample of cube

$$\text{I.T.R.} \geq (f_{ck} - 3)\,N/mm^2$$

(c) The test result shall be taken with minimum 3 Numbers cube specimen and the individual variation in test result shall not be more than ± 15% of average strength.

→ **Concrete Mixes :-** There are two type of concrete mixes.

(1) Nominal Mix –

» A fixed proportion like - 1 : 2 : 4 or 1 : 1.5 : 3 of concrete showing volumetric ratio of materials is taken

» Quality of material used is not considered

» Use for rough type of concrete work in small quantity

» Generally used for concrete less than M20 grade

» It is assumed that desired strength will be obtained

(2) Design Mix –

» Relative proportion of cement, sand and aggregate is designed to get desired strength.

» Quality of material is considered

» Designed such that the average result of compressive strength of cube sample is not less than mean strength which also knows as target design strength.

$$f_{avg.} \geq f_m$$

$$f_{avg.} \geq (f_{ck} + 1.65\sigma)$$

→ **Young's Modulus of elasticity of concrete :-** Young's modulus of elasticity of concrete is defined as the ratio of stress to strain at a particular stage of loading.

→ As per IS 456 : 2000, modulus of elasticity of concrete is taken as follow

$E_C = 5000\sqrt{f_{ck}}$ → According to IS 456 : 2000 (LSM)

$E_C = 5700\sqrt{f_{ck}}$ → According to IS 456 : 1978 (WSM)

→ Modulus of elasticity can be measured in different manner.

(1) Initial Tangent Modulus of Elasticity (EIT) :-

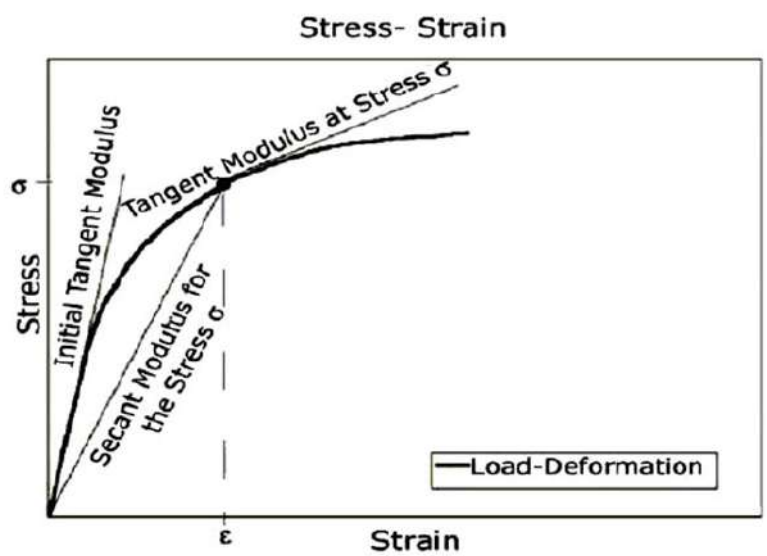

→ It is the slope of stress-strain curve at origin

→ It is also termed as modulus of elascity at origin or dynamic modulus of elasticity.

(2) Secant Modulus of Elasticity (E_S) :- It is the slope of line joining any point of consideration on stress-strain curve and origin.

It is also called as static modulus of elasticity.

(3) Tangent Modulus of Elasticity (E_T) :- It is the slope of tangent drawn at any point of consideration or point of loading on the curve. This is a instantaneous value of modulus of elasticity.

→ Within elastic zone all the three modulus of elasticity is same.

$$E_{IT} = E_S = E_T = 5000\sqrt{f_{ck}}$$

→ In plastic zone

$$\theta_{IT} > \theta_S > \theta_T$$

$$E_{c1} > E_S > E_T$$

Note :- All the above modulus of elasticity considered are short term modulus of elasticity.

If long term modulus of elasticity is to be considered than effect of creep should also be considered.

Long term value of E_C

$$E_C = \frac{5000\sqrt{f_{ck}}}{1+\theta}$$

Where, θ = Creep coefficient (ultimate creep coefficient)

$$\theta = \frac{\text{Ultimate creep strain}}{\text{Elastic strain}}$$

Time after casting when concrete is loaded	7 days	28 days	1 year
Value of creep coefficient (ultimate)	2.2	1.6	1.1

Note :-

- There may be variation of ± 20% in actual value and theoretical value of young's modulus
- Secant modulus of elasticity is observed at $1/3\, f_{ck} \approx \sigma_{cbc}$ at $1/3^{rd}$ of failure strength value

→ Permissible stresses in concrete :-

The concrete may be subjected to

(1) Direct Stress → Direct compression or Direct Tension

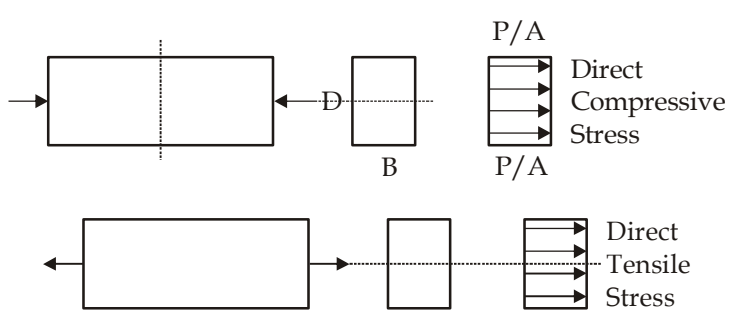

(2) Bending Stresses

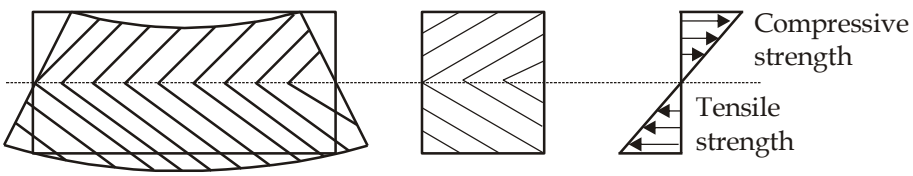

Bending Compressive Stress :-

Maximum Permissible Bending Compressive Stress $= \sigma_{cbc} = \dfrac{f_{ck}}{\text{Factor of safety}}$

In WSM $= \sigma_{cbc} = \dfrac{f_{ck}}{3.0}$

→ **Tensile Strength of Concrete :-**

» It is approximately 10% (7% to 15%) of the compressive strength.

» Stress-strain diagram is almost linear.

» Ratio of compressive strength to tensile strength increases with increase in grade of concrete.

» Since tensile strength of concrete is ignored in RCC structure so it has very less importance. However, it is calculated to determine cracking moment.

(A) Bending Tensile Strength (f_{cr}) :- Flexural tensile strength of concrete

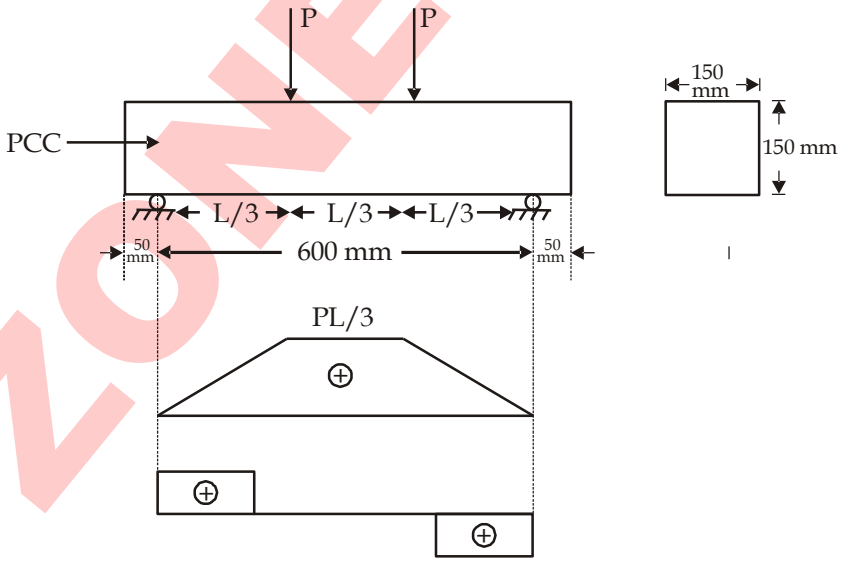

$$\frac{M}{I} = \frac{f}{y}$$

$$\frac{P_{cr} L/3}{bD^3/12} = \frac{f_{cr}}{D/2}$$

$$f_{cr} = ?$$

ZONE TECH

- 3rd point loading is applied for pure bending condition (flexure).
- Value of P is increased from 0 to value corresponding to which 1st crack develops in extreme tension fibre.
- Corresponding to cracking load, bending moment is calculated in central portion and tensile strength is calculated as illustrated above.
- IS : 456 provides standard formula for flexure tensile strength/modulus of rupture

$$f_{cr} = 0.7\sqrt{f_{ck}}\ N/mm^2$$

(B) Split Tensile Strength (f_{cs}) :-

- A line loading along length is applied at diametrically end points.
- Due to this loading, cylinder splits into two parts.

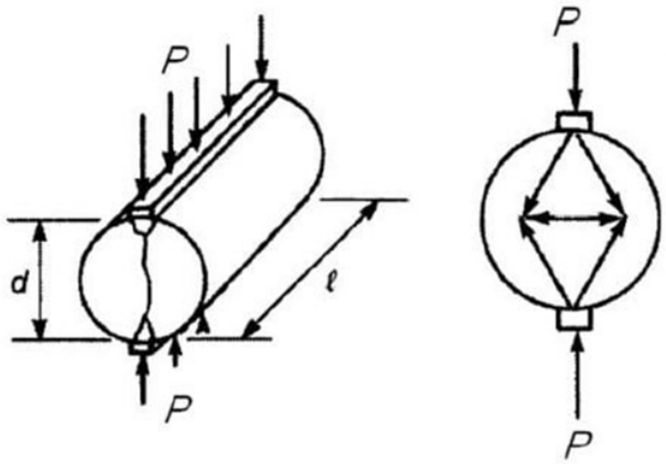

$$\text{Split tensile strength} = \frac{2P}{\pi DL}$$

$$fcs = \frac{2}{3}f_{cr} = \frac{2}{3}\times 0.7\sqrt{f_{ck}}$$

$$= 0.45\sqrt{f_{ck}}$$

(C) Direct Tensile Strength (f_{cd}) :- Practically it is very difficult to perform direct tension test because force never remains perfectly axial tension due to non-homogenity of concrete.

$$f_{cd} = \frac{1}{2}f_{cr} = \frac{1}{2}\times 0.7\sqrt{f_{ck}}$$

$$= 0.35\sqrt{f_{ck}}$$

Hence $f_{cr} > f_{cs} > f_{cd}$

→ **Permissible Stresses in Concrete (In WSM)**

Grade	In compression		In tension	
	Direct compression (σ_{cc})	Bending compression (σ_{cbc})	Direct tension (σ_{ct})	Bending tension (σ_{cbt})
M15	4.0	5.0	2.0	$f_{cr} = 0.7\sqrt{f_{ck}}$
M20	5.0	7.0	2.8	
M25	6.0	8.5	3.2	
M30	8.0	10.0	3.6	
M35	9.0	11.5	4.0	
M40	10.0	13.0	4.4	
M45	11.0	14.5	4.8	
M50	12.0	16.0	5.2	

→ **Steel reinforcement**

» Steel reinforcement used mainly for taking tension in concrete.

» Steel reinforcement are of various type

(1) Mild steel reinforcement (Fe250)

(A) ordinary (B) Hot rolled

(2) Medium strength steel reinforcement (Fe350)

(A) ordinary (B) Hot rolled

(3) High strength steel reinforcement (Fe415/Fe500)

- HYSD (High yield strength deformed bars)
- TMT (Thermo-mechanically treated bars)
- CTD (Cold twisted deformed bars)

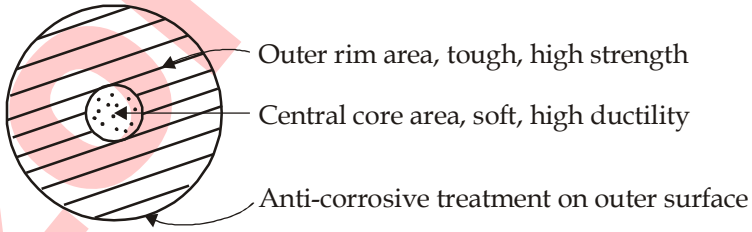

Properties :-

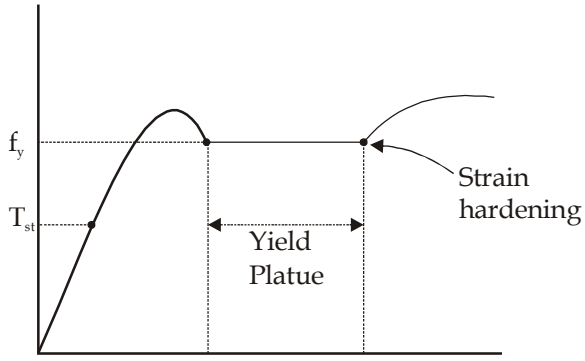

- Mostly hot rolled mild steel reinforcement were used in old building.
- Because of yield plateau region, excessive deformation is being observed without any increase in load in case of hot rolled mild steel due to which concrete member with such steel will shows high deformation and cracking, once stress value go beyond yield stress value.
- Hence to avoid this yield plateau, the mild steel reinforcement can be changed into cold twisted bars by cold working process.
- Steel reinforcement is stressed beyond yield point either by stretching or twisting and then by unloading it. This process is called as cold working process.
- After cold working, the steel reinforcement will not show any yield plateau again.
- Such steel does not show a defined yield point.
- Yield stress is the value of stress at which a permanent (plastic) strain of 0.002 is observed.

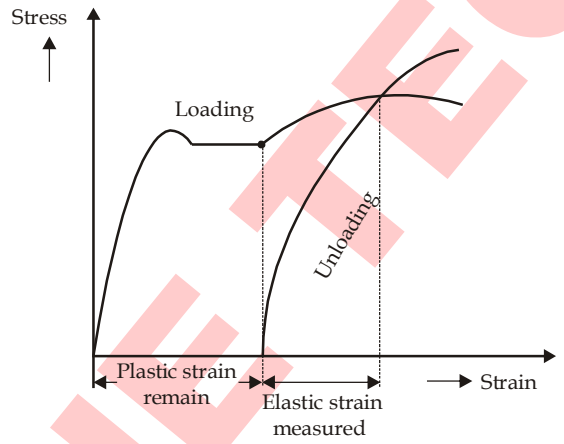

→ **For CTD/TMT/HYSD bars**

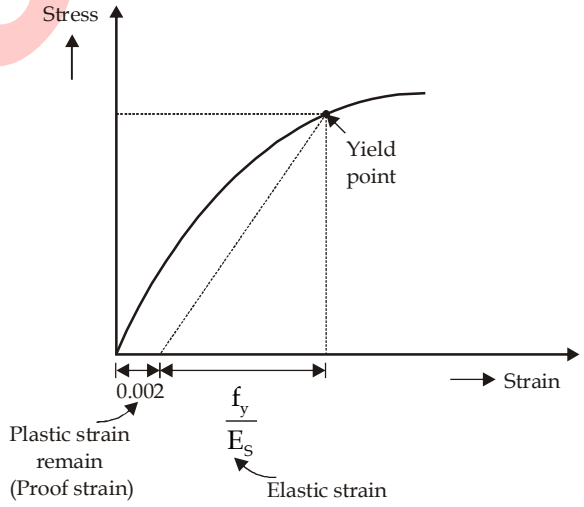

ZONE TECH

Properties of CTD/TMT/HYSD bars :- (IS 456 : 2000, table 22)

- These reinforcement have very high strength
- Stress diagram does not show yield point
- Yield stress is read by proof strain value of 0.002 strain value
- A line drawn from 0.2% proof strain value parallel to stress-strain diagram and cutting point on stress-strain curve is considered as yield point
- At yield stress, total strain in steel

Strain at yield stress $= 0.002 + \frac{f_y}{E_s}$

Where $E_S =$ Young's modulus of elasticity of steel

$= 2 \times 10^5 \ N/mm^2$

For Fe415 steel $= 0.002 + \frac{415}{2 \times 10^5} = 0.00707$

For Fe500 steel $= 0.002 + \frac{500}{2 \times 10^5} = 0.0075$

→ **Permissible Values of Stress in Steel :-**

		Mild Steel Fe 250	Medium Strength Steel (Fe350)	Fe415
A	In tension			
	$\phi \leq 20mm$	140	190	230
	$\phi > 20mm$	130	190	230
B	In compression in column	130	130	190
C	Compression in bar in a beam or slab when the compressive resistance of the concrete is taken into account	$1.5m\ \sigma_{sc}$		

For Fe500 →

In direct tension and flexure tension = 0.55 f_y = 0.55 × 500 = 275 N/mm²

In shear and compression shall be as for grade Fe415

→ **Nominal Cover :-** Nominal cover is minimum clear cover required for outermost layer of steel reinforcement provided. Design depth of concrete cover provided to all kind of steel reinforcement including likes (Ties, stirrups etc) as per IS 456:2000.

→ **Minimum Nominal Cover Required :-**

S.No.	Member	Mild	Moderate	Sever	Very Sever	Extreme
1	Slab	20	30	45	50	75
2	Beams	25	30	45	50	75
3	Column	40	40	45	50	75
4	Foundation	50	50	50	50	75
Minimum nominal cover as per above condition		20	30	45	50	75

→ **Effective Cover :-** It is the distance between the C.G. of tensile reinforcement and outer surface of concrete.

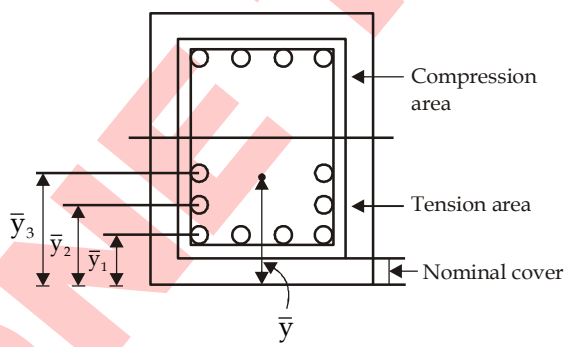

Effective Cover = $\bar{y}$ = Distance of C.G. of tensile reinforcement from outer surface of concrete.

$$\bar{y} = \frac{A_{st_1}.\bar{y}_1 + A_{st_2}.\bar{y}_2 + A_{st_2}.\bar{y}_3}{A_{st_1} + A_{st_2} + A_{st_3}}$$

ZONE TECH

CHAPTER - 2
(WORKING STRESS METHOD)

→ **Introduction :-** The basic of this method is that the permissible stresses in concrete or in steel or in both are not being exceeded at any point throughout the section when it is being subjected to worst possible combination of load.

- This method is also known as modular ratio methods where modular ratio is defined as the ratio of Young's modulus of elasticity of steel to that of concrete.

$$m = \frac{E_S}{E_C}$$

- If long term effect is also considered then

$$m = \frac{E_S}{E_{cl}} = \frac{E_S}{\frac{E_C}{1+\theta}}$$

$$m = \frac{E_S}{E_C} \times (1+\theta)$$

- According to IS 456 : 2000, the modular ratio used is as follows

$$m = \frac{280}{3\sigma_{cbc}} \leftarrow \text{In Tension}$$

$$m' = 1.5m \leftarrow \text{In compression (As effect of creep is more in compression then in tension)}$$

Grade of concrete	M15	M20	M25	M30	M35	M40	M45	M50
σ_{cbc}	5	7	8.5	10	11.5	13	14.5	16
m	18.67	13.33	10.98	9.33	8.12	7.18	6.44	5.83

→ **Use of Modular Ratio (m) :-**

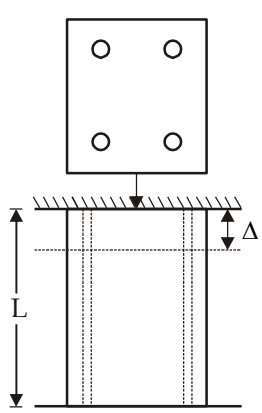

ZONE TECH

Total load, $P = P_S + P_C$

$$\sigma_C = \frac{P_C}{A_C}, \qquad \sigma_S = \frac{P_S}{A_S}$$

$$P_C = \sigma_C . A_C, \qquad P_S = \sigma_S . A_S$$

$$\therefore \quad P = \sigma_S A_S + \sigma_C A_C \qquad \text{... (i)}$$

Due to proper bond between steel and concrete, strain in steel and concrete will be same.

$$e_s = e_c$$

$$\frac{P_S L}{A_S E_S} = \frac{P_C L}{A_C E_C}$$

$$\frac{\sigma_S}{E_S} = \frac{\sigma_C}{E_C}$$

$$\sigma_S = \frac{E_S}{E_C} . \sigma_C$$

$$\sigma_S = m . \sigma_C \qquad \text{... (ii)}$$

Hence, stress in steel = m × stress in concrete

Now put $\sigma_S = m\sigma_C$ in equation (i)

$$P = m\sigma_C A_S + \sigma_C A_C$$

$$P = \sigma_C (m A_S + A_C)$$

$(m\ A_S + A_C)$ = Total equivalent area in terms of concrete.

Hence $A_C = m\ A_S$

$$A_S = \frac{A_C}{m}$$

→ **Factor of safety :-** In WSM, F.O.S. is applied to stress value only (No F.O.S. is applied to load)

(A) Concrete :-

$$\text{Factor of safety to stress} = \frac{\text{Failure stress}}{\text{Permissible stress}} = \frac{f_{ck}}{\sigma_{cbc}} \approx 3.0$$

Ex.

$$\left.\begin{aligned} &\text{For M30, F.O.S.} = \frac{f_{ck}}{\sigma_{cbc}} = \frac{30}{10} = 3.0 \\ &\text{For M25, F.O.S.} = \frac{f_{ck}}{\sigma_{cbc}} = \frac{25}{8.5} = 2.94 \\ &\text{For M20, F.O.S.} = \frac{f_{ck}}{\sigma_{cbc}} = \frac{20}{7} = 2.86 \end{aligned}\right\} = 3.0$$

- Factor of safety for load $= 1.0$
- Net factor of safety $= 1 \times 3.0 = 3.0$

(B) Steel

$$\text{F.O.S.} = \frac{\text{Characteristics strength}}{\text{Permissible stress}} = \frac{f_y}{\sigma_{st}} \approx 1.80$$

Ex

$$\left.\begin{array}{lll} \text{For Fe250,} & \text{F.O.S.} = \dfrac{f_y}{\sigma_{st}} = \dfrac{250}{140} = 1.79 \\ \text{For Fe415,} & \text{F.O.S.} = \dfrac{f_y}{\sigma_{st}} = \dfrac{415}{230} = 1.80 \\ \text{For Fe500,} & \text{F.O.S.} = \dfrac{f_y}{\sigma_{st}} = \dfrac{500}{0.55 f_y} = 1.82 \end{array}\right\} = 1.80$$

- FOS for load $= 1.0$
- Net F.O.S. $= 1.0 \times 1.80 = 1.80$
- FOS for concrete is more because control over the quality of concrete is not as good as that of steel.

→ **Assumption :-** (As per Cl. B-1.3/P-80)IS 456 : 2000)

(1) Plane section before bending remain plain after bending. It means strain is directly proportional to the distance from the neutral axis and strain diagram remain linear.

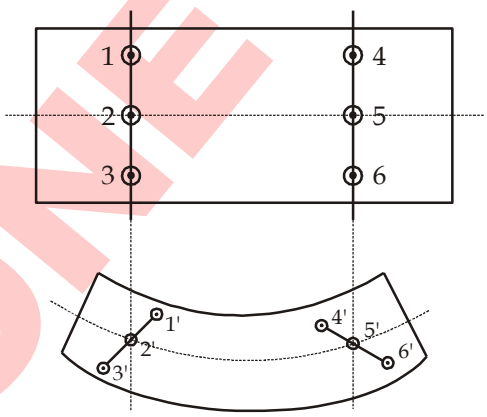

(2) Entire tensile stresses are carried by steel reinforcement only and the none by concrete.

- Where stress developed in concrete in tension becomes more than flexural tensile strength ($f_{cr} = 0.7\sqrt{f_{ck}}$) of the concrete, the concrete is considered as cracked. In this case concrete section in tension zone are completely neglected and all tensile stresses are considered to be carried by steel reinforcement.

(3) Area of concrete in tension is neglected.

(4) Steel used is free from initial stress.

(5) Young's modulus of elasticity of steel and concrete remain same.

(6) The value of modular ratio for design purpose shall be considered as

$$m = \frac{280}{3\sigma_{cbc}}$$

Short term value of $'m' = \frac{E_S}{E_C} = \frac{2\times10^5}{5000\sqrt{f_{ck}}}$

Long term value of $'m' = \frac{E_S}{E_{CL}} = \frac{2\times10^5}{5000\sqrt{f_{ck}}}\times(1+\theta)$

Ex. - Consider M30

Short term $'m' = \frac{2\times10^5}{5000\sqrt{30}} = 7.30$

Long term $'m' = \frac{2\times10^5}{5000\sqrt{30}}\times(1+1.6) = 18.98$

$$m = \frac{280}{3\sigma_{cbc}} = \frac{280}{3\times10} = 9.33$$

Hence the value of 'm' suggested by code consider partial effect of creep.

(7) Hooke's law is valid it means stress is directly proportional to strain and the variation of stress with strain is linear.

→ **Analysis of singly reinforced beam :-**

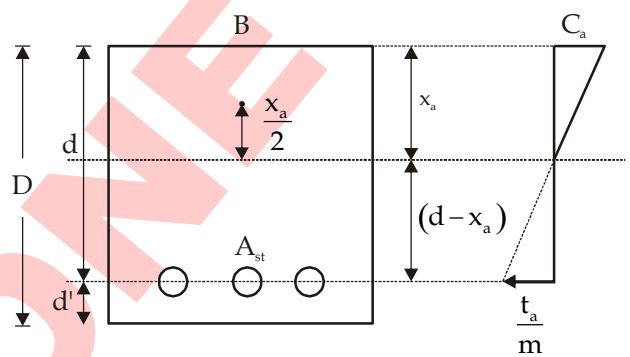

B = Width of beam,
D = Overall depth of beam
d' = Effective cover,
d = Effective depth
x_a = Actual depth of neutral axis
A_{st} = Area of steel provided in tension

(A) Actual depth of neutral axis (x_a) **:-** It is the centroidal axis neglecting the area of concrete in tension. It is calculated by equating the moment of area on both side of N.A.

$$(B.x_a).\frac{x_a}{2} = mA_{st}(d-x_a)$$

$$B.\frac{x_a^2}{2} = m\,A_A(d-x_a)$$

(B) Critical depth of neutral axis (X_c) :- It is that depth of neutral axis from which increase in stresses of concrete and steel are such that they reaches their maximum permissible value simultaneously at the same time.

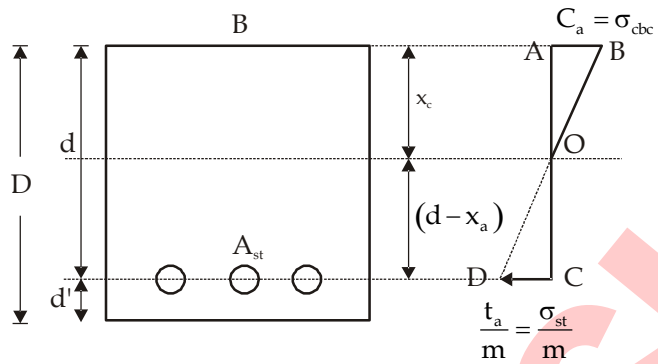

From similar triangle in stress diagram.

$$\frac{OA}{AB} = \frac{OD}{CD}$$

$$\frac{x_c}{\sigma_{cbc}} = \frac{d - x_c}{\frac{\sigma_{st}}{m}}$$

$$\frac{d - x_c}{x_c} = \frac{\sigma_{st}}{m\sigma_{cbc}}$$

$$x_c = \left(\frac{1}{1 + \frac{\sigma_{st}}{m\sigma_{cbc}}}\right) d$$

$$x_c = kd$$

K = Critical depth factor $= \dfrac{1}{1 + \dfrac{\sigma_{st}}{m\sigma_{cbc}}}$

Also

$$x_c = \left(\frac{1}{1 + \sigma_{st} / m\sigma_{cbc}}\right) d = \left(\frac{m\sigma_{cbc}}{m\sigma_{cbc} + \sigma_{st}}\right) d$$

$$x_c = \left(\frac{\frac{280}{3\sigma_{cbc}} \times \sigma_{cbc}}{\frac{280}{3\sigma_{cbc}} \times \sigma_{cbc} + \sigma_{st}}\right) .d = \left(\frac{93.33}{93.33 + \sigma_{st}}\right) d$$

Hence critical depth of neutral axis depends upon grade of steel only. It does not depend on grade of concrete, area of steel and area of concrete provided.

ZONE TECH

Type of section base on 'x_a' and 'x_c'

(1) If $x_a < x_c \rightarrow$ Under reinforced section

(2) If $x_a = x_c \rightarrow$ Balanced section

(3) If $x_a > x_c \rightarrow$ Over reinfoced section

(C) Bending moment and moment of resistance :-

- Depending upon the span and loading on the section the moment generated in the section is known as bending moment.
- Moment of resistance is that value of bending moment to which if the section is sujected then stress in either steel or in concrete or in both reach upto their maximum permissible stress value.
- Moment of resistance depends upon the cross-section of the section and area of steel provided. It signify the maximum moment carrying capacity of section.
- Moment of resistance is always calculated using actual depth of neutral axis.

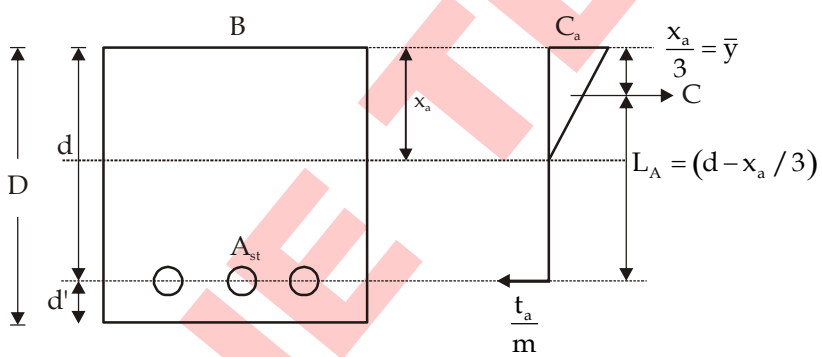

$$M_r = \text{(Compressive force or Tensile force)} \times \text{Lever arm}$$

$$M_r = C.L_A \text{ or } T.L_A$$

$$C = \text{Total compressive force}$$

$$= \text{(Average stress)} \times \text{(Area on which it is acting)}$$

$$= \left(\frac{0 + C_a}{2}\right) \times (B.x_a)$$

$$= \frac{1}{2} B.x_a C_a$$

or

$$C = \text{(Area of stress diagram)} \times \text{(Width of section)}$$

$$= \left(\frac{1}{2} \times C_a x_a\right) \times B$$

$$= \frac{1}{2} B.x_a C_a$$

L_A = Lever arm = Distance between point of action of total compressive force and total tensile force.

$$= (d - \bar{y})$$

$$= (d - x_a / 3)$$

Hence

$$M_r = CL_A$$

$$M_r = \frac{1}{2} B x_a C_a (d - x_a / 3)$$

Also from tension side

$$M_r = T.\ L_A$$

T = Total tensile force

$$= \left(\frac{t_a}{m}\right) \times (m\ A_{st}) = t_a A_{st}$$

$$L_A = d - \bar{y} = d - x_a / 3$$

$$M_r = T.\ L_A$$

$$M_r = t_a A_{st} (d - x_a / 3)$$

(i) Under reinforced section - $(x_a < x_c)$

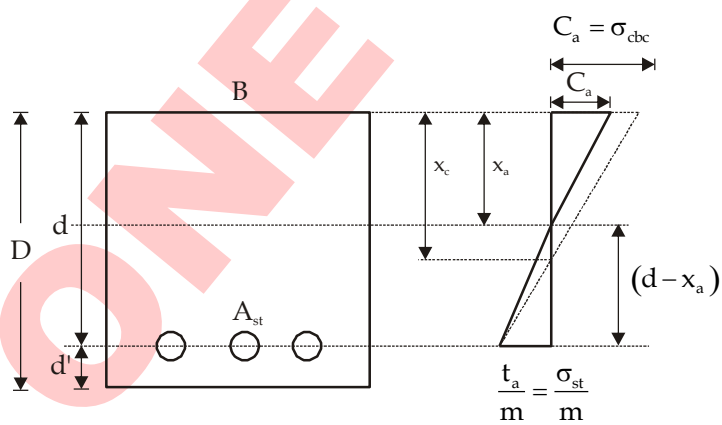

Since value of stress in steel is known hence moment of resistance is calculated from tension side.

$$m_r = t_a\ A_{st} (d - x_a / 3) = \sigma_{st} (d - x_a / 3)$$

Also from compression side

$$m_r = \frac{1}{2} B x_a\ C_a (d - x_a / 3)$$

For C_a, from similar triangle

$$\left(\frac{C_a}{x_a} = \frac{\sigma_{st} / m}{(d - x_a)}\right)$$

→ **Properties of under reinforced section :-**

- Area of reinforced provided in under reinforced section is less than that required by balanced section.
- Stress in steel reach upto it's maximum permissible value $(t_a = \sigma_{st})$ but stress in concrete remains less than it's permissible value $(c_a < \sigma_{cbc})$.
- The failure of under reinforced section is due to the failure of steel (Tensile failure).
- Since steel is a ductile material, hence failure of under reinforced section is ductile failure.
- Such type of section are preferred because they provide sufficient warning before collapse in terms of vibration, cracking, deflection, corosion etc.

(B) Over reinfoced section :- $(x_a < x_c)$

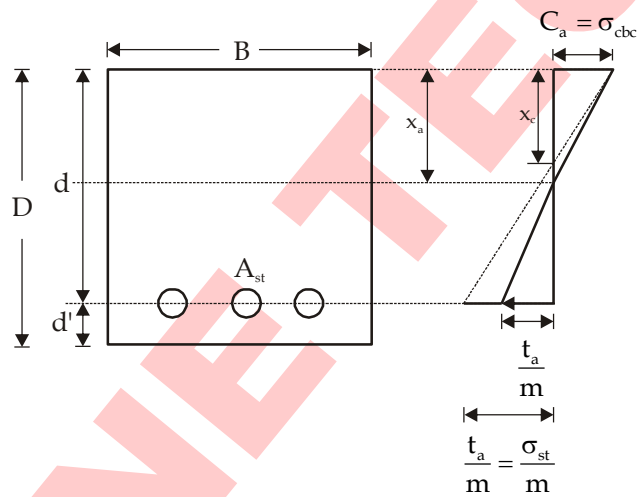

Since stress in concrete reach upto it's maximum permissible value first hence moment of resistance is calculated from compression side.

$$M_r = \frac{1}{2} B.x_a c_a (d - x_a / 3)$$

$$M_r = \frac{1}{2} B x_a \sigma_{cbc} (d - x_a / 3)$$

Moment of resistance can also be calculated from tension ride.

$$M_r = t_a A_A (d - x_{a/3})$$

for t_a, from similar triangle

$$\left[\frac{C_a = \sigma_{cbc}}{x_a} = \frac{t_{a/m}}{d - x_a} \right]$$

- Area of reinforcement provided in over reinforced section is more than that required by balanced section.

- Stress in concrete reach upto it's maximum permissible value but stress in steel remain less than it's maximum permissible value at time of failure.
- The failure of over reinforced section is due to the failure of concrete (Primary Compression Failure).
- Since concrete is a brittle material, hence failure of over-reinforced section is brittle failure.
- Such type of section are avoided because these section tends to sudden collapse and does not provide any warning before collapse.

(C) Balanced Section ($x_a = x_c$), $t_a = \sigma_{st}, C_a = \sigma_{cbc}$

Moment of resistance can be calculated from both side i.e. from compression side or from tension side.

From compression side

$$M_r, \text{bal} = \frac{1}{2} B x_a C_a (d - x_a/3)$$

$$= \frac{1}{2} B\ kd.\sigma_{cbc}\left(d - \frac{kd}{3}\right) \quad (x_a = x_c = kd)$$

$$= \frac{1}{2} k\ \sigma_{cbc}\ (1 - k/3) Bd^2$$

$$M_r, \text{bal} = \frac{1}{2} k\ \sigma_{cbc}.j\ Bd^2$$

$$M_r, \text{bal} = QBd^2$$

Where

$$Q = \frac{1}{2} k\ \sigma_{cbc}\ .j = \text{Moment of resistant factor}$$

$$j = 1 - k/3 = \text{Lever arm factor}$$

$$k = \frac{93.33}{93.33 + \sigma_{st}} = \text{Lever arm factor}$$

From tension side

$$M_r, \text{bal} = t_a A_{st} (d - x_a/3)$$

$$= \sigma_{st}\ A_{st} (d - kd/3)$$

$$= \sigma_{st}\ A_{st} (1 - k/3).d$$

$$M_r, \text{bal} = \sigma_{st}\ A_{st}.jd$$

⇒ Type of problem number (1)

To calculate moment of resistance of a given section

Given

Size of beam → B, d, D

Area of steel → A_{st}

Grade of concrete and steel → σ_{cbc} and σ_{st}

Steps

(1) Calculate x_a

$$B.\frac{x_a^2}{2} = m\,A_{st}(d - x_a) \Rightarrow \text{cal } x_a = ?$$

(2) Calculate x_c

$$x_c = k\,d = \left(\frac{1}{1 + \frac{\sigma_{st}}{m\sigma_{cbc}}}\right).d$$

(3) Compare x_a and x_c

$x_a < x_c$ (U.R.S.)	$x_a = x_c$ (Balanced section)	$x_a > x_c$ (O.R.S.)
$C_a < \sigma_{cbc}$	$C_a = \sigma_{cbc}$	$C_a = \sigma_{cbc}$
$t_a = \sigma_{st}$	$t_a = \sigma_{st}$	$t_a < \sigma_{st}$

(4) Calculate moment of resistance by any one of these two formula.

$$M_r = \frac{1}{2} B\,x_a\,C_a\,(d - x_a/3)$$

or

$$M_r = t_a\,A_{st}\,(d - x_a/3)$$

- One stress will be at maximum permissible and other area can be found by stress formula.

$$\left(\frac{C_a}{x_a} = \frac{t_a/m}{d - x_a}\right)$$

⇒ Type of problem number (2)

Calculate stress in concrete and steel due to a bending moment in a given R.C.C. section.

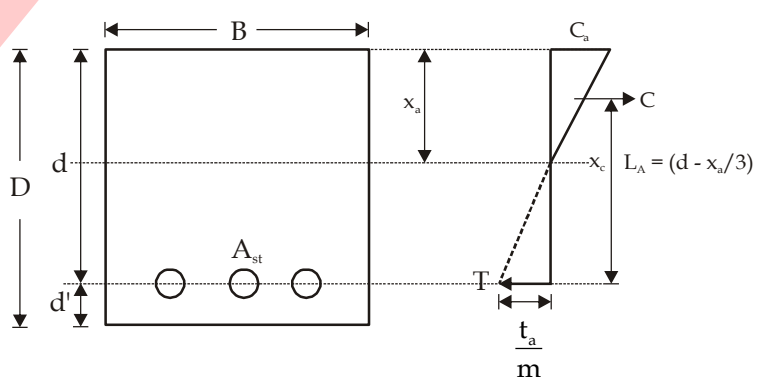

(1) Calculate x_a

$$\frac{B x_a^2}{2} = m A_{st}(d - x_a)$$

$$\text{Calculate } x_a = ?$$

(2) Calculate C_a

$$\text{B.M.} = \frac{1}{2} B x_a C_a (d - x_a / 3)$$

(3) Calculate t_a

$$\text{B.M.} = t_a A_{st}(d - x_a / 3)$$

or

$$\frac{C_a}{x_a} = \frac{t_{a/m}}{d - x_a}$$

⇒ Type of problem number (3)

Design of singly reinforced R.C.C. section

Case - I

When size of beam is not given

- The beam has to be designed for a bending moment.
- We generally design a balanced section.

$$x_a = x_c$$

$$C_a = \sigma_{cbc}$$

$$t_a = \sigma_{st}$$

Equate B.M. with M_r, bal.

$$\text{B.M.} = M_r, \text{bal} = QBd^2$$

$$d = \sqrt{\frac{\text{B.M.}}{QB}}$$

Assume 'B' and get 'd'.

Also

$$\text{B.M.} = \sigma_{st} A_{st} jd$$

$$A_{st}, \text{bal} = \frac{\text{B.M.}}{\sigma_{st}.jd}$$

Case - II

When size of beam is given

Given → B, d, Q, Grade of steel and concrete, B.M.

To find → A_{st}

(1) Calculate M_r, bal $= QBd^2$

If B.M. > M_r, bal → Design doubly reinforced section

If B.M. < M_r, bal → Design singly reinforced section

Doubly Reinforced Beam :- When the section size is limited and moment to be carried by the section is more than the moment MOR of the section than doubly reinforced section are provided.

In such case over reinforced section can also be provided but they tends to sudden collaps hence are not preffered.

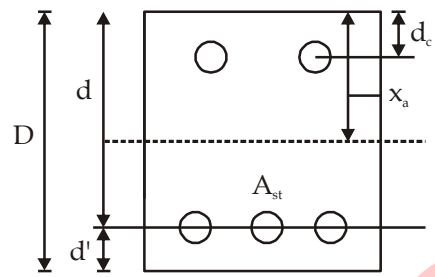

$t_a < \sigma_{st}$

$c_a < \sigma_{cbc}$

(1) CDONA (x_c) :-

$$\left(\frac{1}{1+\left(\frac{\sigma_{st}}{m\sigma_{cbc}}\right)}\right)d$$

(2) ADONA :-

$$\frac{Bxa^2}{2}+(1.5m-1)A_{sc}(x_a-d_c)=M.A_{st}(d-x_a)$$

Moment of resistance :-

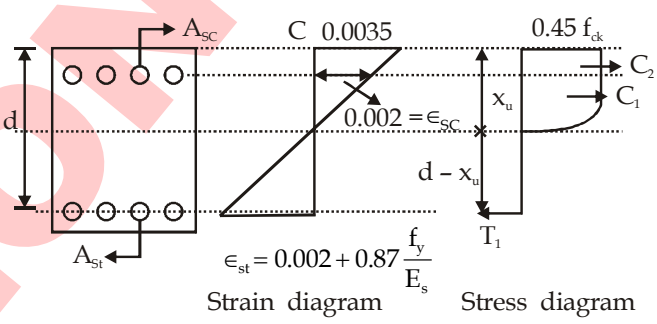

$$MOR_1=\frac{1}{2}Bx_a.c_a\left(d-\frac{x_a}{3}\right)$$

$$MOR_2=\frac{1}{2}Bx_a.c_a.\left(d-\frac{x_a}{3}\right)+(1.5m-1)A_{sc}.c'(d-d_c)$$

From Tension :-

$$MOR=T_1LA_1+T_2LA_2$$

$$MOR=t_a\,A_{st}\,(1)\left(d-\frac{x_a}{3}\right)+t_a\;A_{st2}(d-d_c)$$

CHAPTER - 3
(LIMIT STRESS METHOD)

Limit State Method :-

The purpose of the design based upon the limit state method is to achieve an acceptable probability that the structure will not reach upto its limit state or will not become unservicable during the design life for the use for which it is intended.

→ Limit state comprises of limit state of collapse and limit state of serviceability.

→ Limit state of collapse corresponds to maximum load carrying capacity in flexural, compression, shear etc.

→ Limit state of serviceability corresponds to excessive deformation due to deflection, vibration cracking corrosion etc.

→ This method is based on principle strain failure theory

Design Strength :-

Strength :-

(1) For concrete :-

$$\text{Design strength} = \frac{\text{char.strength}}{\text{FOS}}$$

$$= .67\, f_{ck}/1.5$$

$$= .446\, f_{ck}$$

$$= .45\, f_{ck}$$

(2) For Steel :-

$$\text{Design strength} = \frac{\text{char.strength}}{\text{FOS}}$$

$$= \frac{f_y}{1.15}$$

$$= .87\, fy$$

(3) Design load :-

Design load = Load factor × char. load

ZONE TECH

Partial FOS :-

Load combination	Limit state of collapas			Limit state of sarvicabiity		
	DL	L.L	WL/FQL	DL	L.L	FQL/WL
DL + LL	1.5	1.5	----------	1.0	1.0	
DL + EQL/WL	1.5/.9	----	1.5	1.0	----	1.0
DL + L.L + EQL/WL	1.2	1.2	1.2	1.0	.8	.8

Note :-

→ Wind load or earthquake load are never considered to be acted simultaniously because probability of their simultanious occurrence is very low.

→ 0.9 factor is considered when stability against overturning is critical.

→ Wrost possible combination of load is consider for designing.

Assumptions In LSM :-

1. Plain section before bending remain plane after bending
2. Area of concrete in tension is neglected
3. Maximum strain in concrete at outermost compression fiber is equal to 0.0035
4. At the time of failure strain in tensile steel should not be less than

$$\nless \frac{f_y}{1.15E_S} + 0.002$$

5. Variation of comp. stress with strain in conc. can be assumed to be rectangular, parabolic, trapezoidal or of any other shape which relate the result obtained practically.
6. By practice it is found that variation of comp stress with strain is partially parabolic partially rectangle.
7. LSM takes concrete to higher stress level as compared to WSM.

Singly Reinforced Beam :-

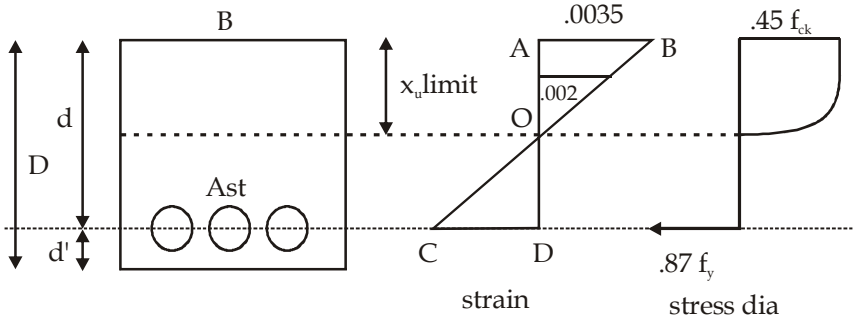

1. Limiting depth of NA (x_u limit) :-

From strain dia, by similar triangle

$$x_u \text{limit} = \left(\frac{700}{1100 + .87fy}\right) d$$

$$x_u \text{ limit} = k\,.d$$

For fe 250 $\rightarrow$ k = 0.53 $\rightarrow$ x_u limit = .53d

For fe 415 $\rightarrow$ k = 0.48 $\rightarrow$ x_u limit = .48d

For fe 500 $\rightarrow$ k = 0.46 $\rightarrow$ x_u limit = .46d

(2) Actual Depth of NA (x_u) :-

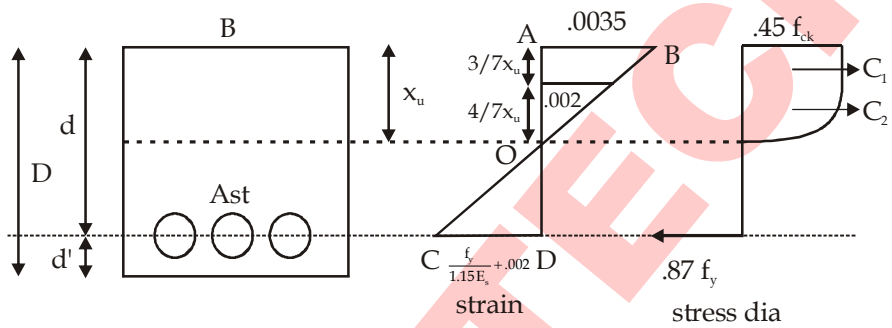

For actual NA

= Total comp force = Total tensile force

$$C = C_1 + C_2$$

From strain dia.

$$\frac{.0035}{x_u} = \frac{.002}{x}$$

$$x = \frac{.002}{.0035} x_u$$

$$= \frac{4}{7} x_u$$

$$\bar{y} = \frac{c_1 y_1 + c_2 y_3}{c_1 + c_2}$$

$$y = 0.419\, x_u$$

$$\approx .42\, x_u$$

$$C = .191\, f_{ck}\, Bx_u + .171\, f_{ck}\, B\, x_u$$

$$= 0.36\, f_{ck}\, B\, x_u$$

$$T = 0.87\, f_y\, Ast$$

$$C = T$$

$$0.36\, f_{ck}\, B\, x_u = .87\, F_y\, Ast$$

$$x_u = \frac{0.87 f_y\, Ast}{.36 f_{ck}\, B}$$

Moment of resistance :-

$$M_u = .36\, f_{ck}\, Bx_u\, (d - .42\, x_u)$$
$$T = .87\, f_y\, Ast$$
$$LA = d - \bar{y} = (d - .42\, x_u)$$
$$M_u = .87\, f_y\, Ast\, (d - .42\, x_u)$$

(1) Under reinforced section = $x_u < x_u$ limit

$$M_u = .36\, f_{ck}\, B\, x_u\, (d - .42\, x_u)$$
$$M_u = .87\, f_y\, Ast\, (d - .42\, x_u)$$

(2) Balance section :- $x_u = x_u$ limit

$$M_u \text{ limit} = .36\, f_{ck}\, Bx_u\, (d - .42\, x_u)$$
$$= .36\, f_{ck}\, B\, k_d\, (d - .42\, k_d)$$
$$= .36\, f_{ck}\, k\, (1 - .42\, k)\, Bd^2$$
$$M_u \text{ limit} = QBd^2$$

For fe 250 – Q = .148 f_{ck}
fe 415 – Q = .138 f_{ck}
fe 500 – Q = .134 f_{ck}

(3) ORS $x_u > x_u$ limit
over reinforced sections are not designed in LSM.

Design of singly reinforced beam :-
Case - I
When section dimensions are given and Ast is to be calculated :-

(1) **Design moment :-** Step - I
(i) Calculate design factored / ultimate by multiplying partial factor of safety to service / working moment.

Step - II Calculate limiting moment.

$$M_u \text{ limit} = QBd^2$$
$$Q = .148\, f_{ck} \text{ For Fe 250}$$
$$Q = .138\, f_{ck} \text{ Fe 415}$$
$$Q = .134\, f_{ck} \text{ Fe 500}$$

Step - III

(a) If $BM_u > M_u$ limit than doubly reinforced section is designed
(b) If $BM_u < M_u$ limit than singly reinforced section is designed.
For this

(4) $BM_u = .36\, f_{ck}\, B\, x_u\, (d - .42\, x_u)$
$x_u = ?$

(5) $BM_u = .87\, f_y\, A_{st}\, (d - .42\, x_u)$
Ast = ?

OR

$$Ast = \frac{.5 f_{ck}}{f_y}\left[1 - \sqrt{1 - \frac{4.6 M_u}{f_{ck} Bd^2}}\right] B.d$$

(6) Check for Ast :-

$$\text{Minimum } A_{st} \text{ required :- } \frac{Ast}{Bd} > \frac{.85}{f_y}$$

$$\text{Maximum } A_{st} \text{ required :- Ast} < \text{min of } \begin{cases} A_{st\ lim} \\ 4\% \text{ of BD} \end{cases}$$

Case - II

When section size and Ast both are to be calculated.

Step - I

Calculate factored / ultimate design B.M.

II. Assume suitable value of B/d ratio.

(Lateral bucking) $.3 > \frac{B}{d} < .7$ (uneconomical)

III. calculate d required for balance section.

$BM_u = M_{u\ lim} = QBd^2$

$$d = \sqrt{\frac{M_{u\ lim}}{BQ}}$$

IV:- Provide 'd' suitably higher than calculated above and calculate B accordingly.

V. Section size provided in step IV is higher than that required in step III. hence we are designing under R/F section.

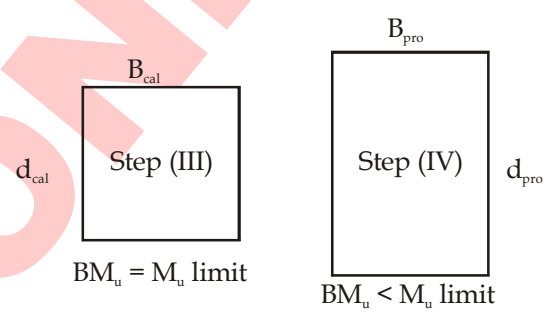

VI :-

$$Ast = 1 - \left[1 - \sqrt{1 - \frac{4.6 BM_u}{f_{ck} Bd^2}}\right].d$$

At should lie within permissible limit

$$\frac{Ast}{Bd} > \frac{.85}{fy}$$

$$Ast < \text{minimum} \begin{cases} \text{Ast limit} \\ 4\% \text{ Bd} \end{cases}$$

Doubly R/F beam :-

When the section diamension is restricted and moment to be carried by it is more than the moment of resistance of balance section than doubly R/F section are provided.

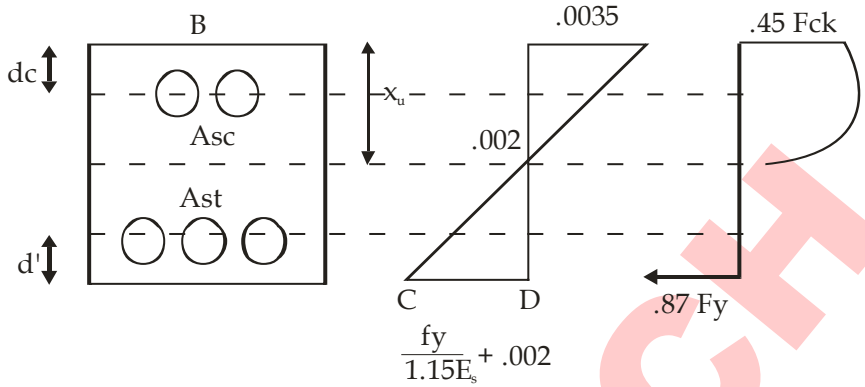

From similar triange

$$= \frac{0.0035}{x_u} = \frac{Esc}{x_u - d_c}$$

$$Esc = \frac{.0035(x_u - dc)}{x_u}$$

For limiting section

$$Esc = \frac{0.0035(x_{u\,limit} - dc)}{x_u limit}$$

→ Stress in concrete in comp is 0.45 f_{ck}

→ Stress in steel in tension is 0.87 f_y

→ Stress in steel in comp is derived from stress strain curve depending upon the value of strain in comp steel for the given type of steel

If stress strain relation is not given :-

$f_{sc} = 0.87\ f_y$

f_{se} 1 = 217.5 – fe 250

350 – fe 415

450 – fe 500

Analysis :-

(1) Limiting depth :- (x_u limit)

$$x_u \text{ limit} = \left(\frac{700}{1100 + .87fy}\right)d$$

$$x_u \text{ limit} = k.d$$

(2) ADONA :-

$$C = T$$
$$C = C_1 + C_2$$
$$C = T$$
$$0.36\, f_{ck}\, Bx_u + (F_{sc} - 0.45\, f_{ck})\, A_{sc} = .87\, f_y\, Ast.$$

(3) **MOR :-**

$$Mu = .36 f_{ck}\, B x_u (d - .42 x_u) + (f_{sc} - .45 f_{ck}) A_{sc} (d - d')$$

From tension side :-

$$Mu = .87\, f_y\, A_{st1} (d - .42 x_u) + .87 f_y\, A_{st2} (d - dc)$$

Design of Doubly R/F beam :-

(1) Step - I

→ Depending upon the span and loading on the beam calculate B.M and than factored BM by multiplying a suitable load factor.

Case - II.

Calculate M_u limit

$Mu\ limit = QBd^2$

Step - III

→ If BM < Mu limit than SRB is designed

→ If BM > Mu limit than DRB is designed

Step - IV

$$M_{u1} + M_{u2}$$
$$= M_u\ limit + M_{u2}$$
$$M_{u1} = .87\, f_y\, A_{st}\, (d - .42\, x_u)$$
$$A_{st1} = \frac{M_{u1}}{.87 f_y (d - .42 x_u)}$$
$$M_{u2} = BM_u - M_{u1}$$
$$M_{u2} = .87\, f_y\, A_{st}\, (2)\, (d - dc)$$
$$A_{st2} = \frac{M_{u2}}{.87 f_y (d - dc)}$$
$$A_{st} = A_{st\,1} + A_{st2}$$

Also ;

$$M_{u2} = (f_{sc} - 0.45\, f_{ck})\, A_{sc}\, (d - dc)$$
$$Asc = \frac{M_{u2}}{(f_{sc} - 0.45 f_{ck})(d - dc)}$$

T-Beam / L - Beam

Isolated T/L Beam :-

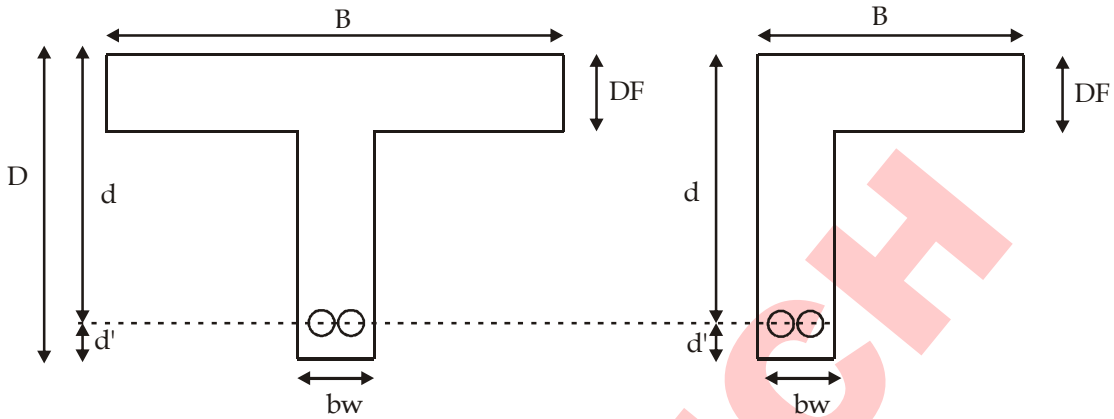

Effective width of flange (B_f)

T beam, $B_f = \dfrac{\ell_0}{\dfrac{\ell_0}{B} + 4} + b_w$

L - beam = $B_f = \dfrac{.5\ell_0}{\dfrac{\ell_0}{B} + 4} + b_w$

ℓ_0 = distance between point of zero moment or contraflexure.

(1) SSB :-

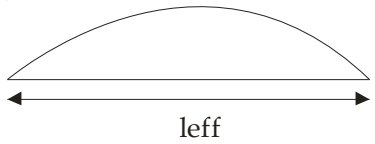

$\ell_0 = l_{eff}$

(2) Fixed and Continuous beam

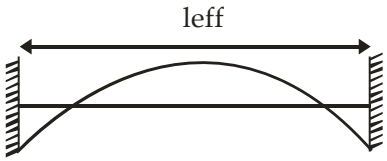

$\ell_0 = .7\, l_{eff}$

ZONE TECH

Case - II

Continuous T/L Beam :-

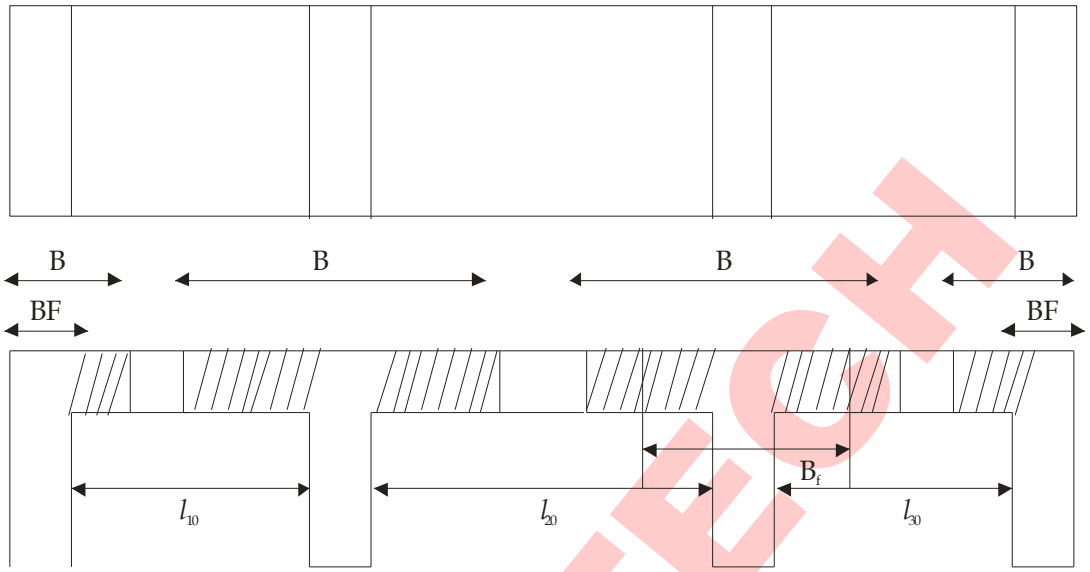

T-Beam :-

$$BF \text{ . minimum of } \begin{cases} \dfrac{\ell_0}{6} + bw + 6D_f \\ \dfrac{\ell_{10} + \ell_{20}}{2} + bw \end{cases}$$

$$L \text{ beam - } B_f \text{ - minimum of } \begin{cases} \dfrac{\ell_0}{12} + bw + 3Df \\ \dfrac{\ell_{10}}{2} + bw \end{cases}$$

Analysis of T/L Beam

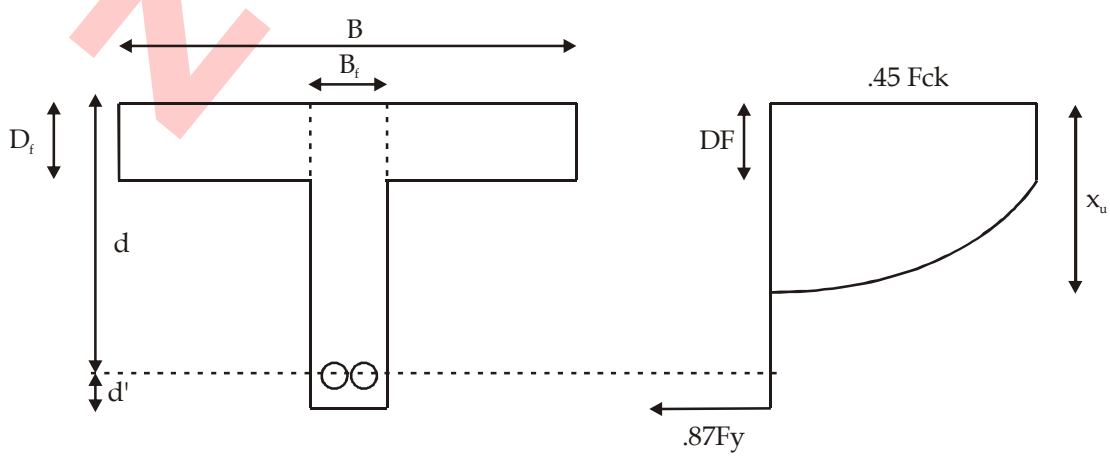

ZONE TECH

(1) Limiting depth of NA :- (x_u limit) :-

$$x_{u\ lim} = \left(\frac{700}{1100 + .87\ f_y}\right) d$$

(2) Actual depth of neutral axis & moment of resistance :-

Case - I $X_u < D_f$

$$C = T$$

$$.36\ f_{ck}\ Bf\ x_u = .87\ f_y\ Ast$$

$$M_u = C \times LA = .36\ f_{ck}\ Bfx_u\ (d - .42\ x_u)$$

OR

$$M_u = T \times LA = .87\ f_y\ Ast\ (d - .42\ x_u)$$

Case II

$x_u > D_f$ Assuming $3/7\ x_u > D_f$

$$C = T$$

$$C = C_1 + C_2$$

$$C_1 = .36\ f_{ck}\ b_w\ x_u$$

$$y_1 = 0.42\ x_u$$

$$LA_1 = d - .42\ x_u$$

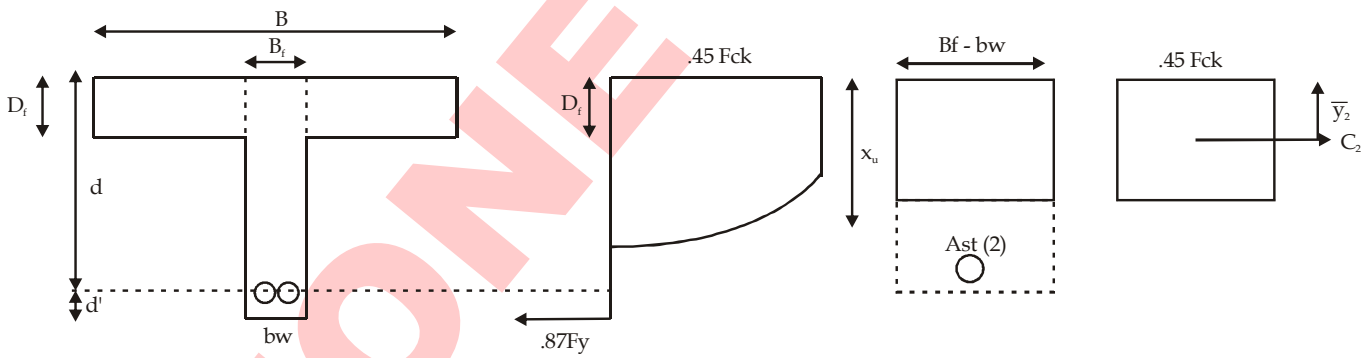

$$C_2 = .45 f_{ck} \times (B_f - b_w) D_f$$

$$\bar{y}_2 = \frac{D_f}{2}$$

$$LA_2 = d - \frac{D_f}{2}$$

$$T = .87\ f_y\ A_{st1} + .87\ f_y\ A_{st2} = .87\ f_y\ A_{st}$$

$$C = T$$

$$0.36 f_{ck}\ b_w\ x_u + 0.45 f_{ck}\ (b_f - b_w) \times D_f = 0.87 f_y\ A_{st}$$

$$M_u = 0.36 f_{ck}\ b_w x_u\ (d - 0.42 x_u) + 0.45 f_{ck}\ (B - b_w) D_f \left(d - \frac{D_f}{2}\right)$$

ZONE TECH

(B) Assuming $\frac{3}{7}x_u < D_f$:-

If $3/7\ x_u < D_f$ than streses in flange are partially rectangel and partially perabolic. In such case as per IS 456-2000 flange portion is considered to have an effective depth of y_f in which variation of stress is rectangular and is equal to $0.45\ f_{ck}$

$$y_f = 0.65\ D_f + 0.15\ x_u$$

$$C = T$$

$$= 0.36\ f_{ck}\ b_w\ x_u + .45\ f_{ck}\ (B_f - b_w)\ y_f = 0.87\ f_y\ Ast$$

$$M_u = 0.36\ f_{ck}\ b_w.\ x_u\ (d - .42\ x_u) + 0.45\ f_{ck}\ (B_f - b_w)\ y_f\ (d - y_f/2)$$

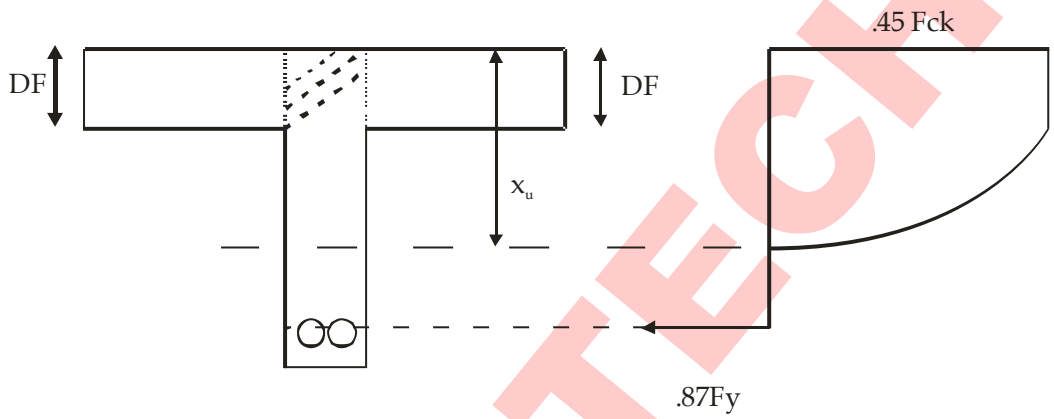

ZONE TECH

CHAPTER - 4
(DESIGN FOR SHEAR)

Analysis Above NA :-

(A) Shear stress variation in homogenious section

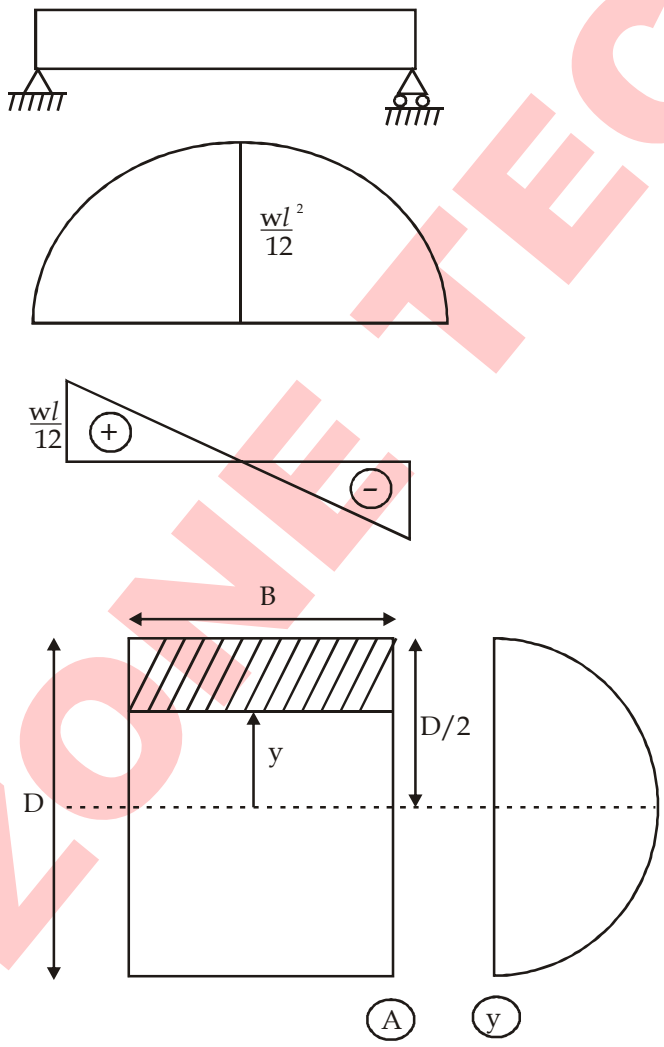

$$\tau = \frac{VA\bar{y}}{Ib}$$

$$\tau = \frac{VA\bar{y}}{Ib}$$

ZONE TECH

$$= \frac{V.B\left(\frac{D}{2}-y\right)\left[y+\frac{1}{2}\left(\frac{D}{2}-y\right)\right]}{\frac{BD^3}{12}\times B}$$

$$= \frac{V\left(\frac{D}{2}-y\right)\left(\frac{D}{2}+y\right)\frac{1}{\cancel{2}}}{\frac{BD^3}{\cancel{12}\,6}}$$

$$= \frac{6V\left(\frac{D}{4}-y^2\right)}{BD^3}$$

$\tau \propto y^2$ (Parabolic variation)

(2) For RCC Beam :-

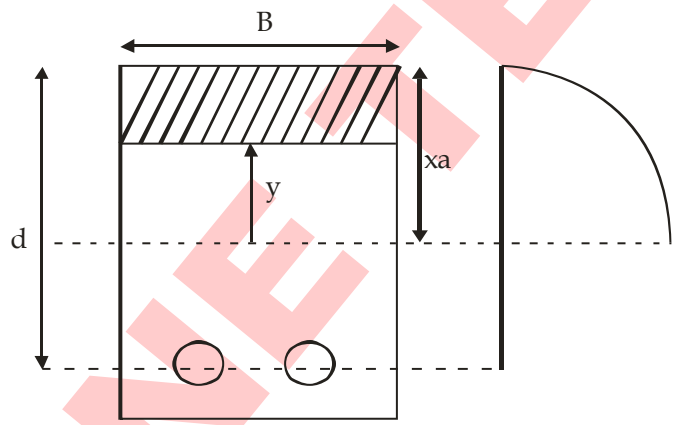

(1) Above NA ;-

$$\tau = \frac{VA\bar{y}}{Ib}$$

$$= \frac{V.B(x_a-\bar{y})\left(y+\frac{1}{2}(x_a-\bar{y})\right)}{I_{eq}.B}$$

$$= \frac{V\times\frac{1}{2}(x_a-y)(x_a+y)}{I_{eq}}$$

$$= \frac{V\left(x_a^2-y^2\right)}{2I_{eq}}$$

$$I_{ea} = \frac{Bxa^3}{3}+m\,A_{st}\,(d-x_a)^2$$

Analysis Below NA :-

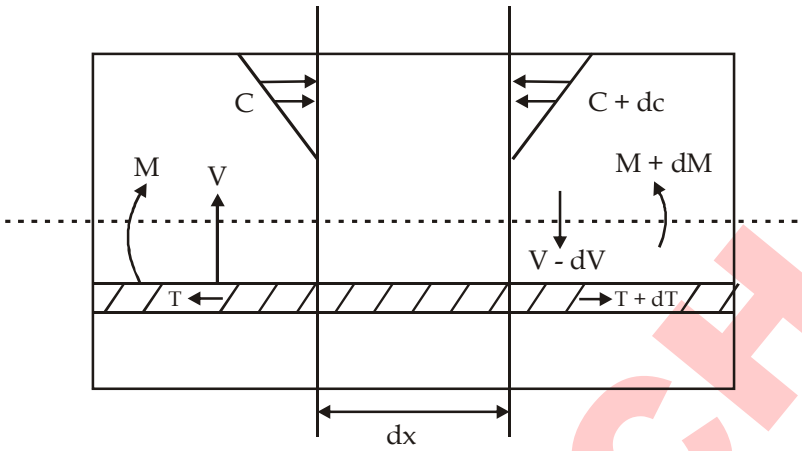

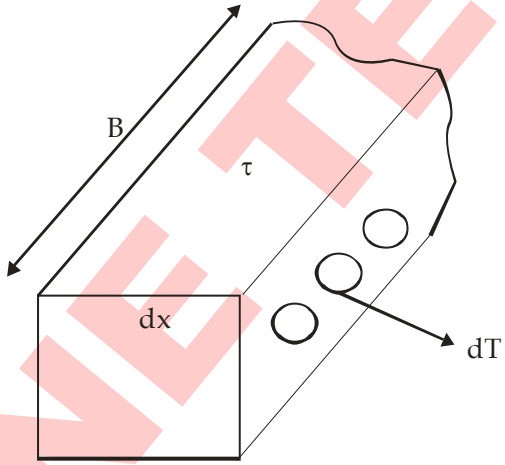

$$\tau = \frac{V}{Bjd}$$

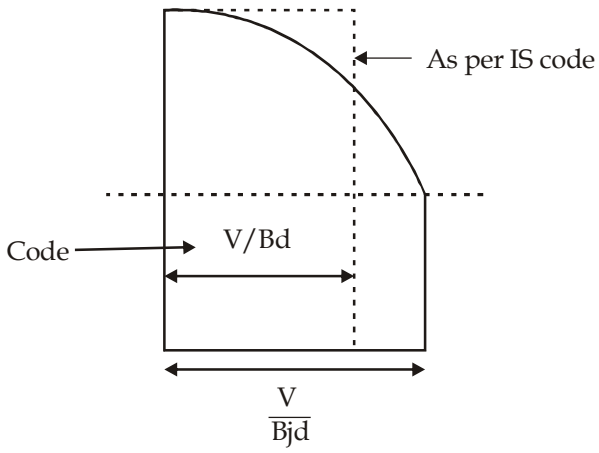

ZONE TECH

As per IS code :-

$$\tau = \frac{V}{B.d}$$

Beam subjected to combined bending and shear stress :-

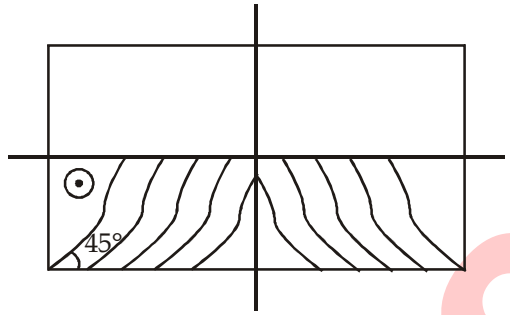

$$\tau_b = \frac{My}{I}$$

$$q = \frac{V}{B.d}$$

$$\sigma_{1,2} = \frac{\sigma_x + \sigma_y}{2} \pm \sqrt{\left(\frac{\sigma_x + \sigma_y}{2}\right)^2 + q^2}$$

$$\sigma_{1,2} = \pm q$$

$$\sigma_1 = q, \quad \sigma_2 = -q$$

$$\tan 2\theta p = \frac{2\tau_{xy}}{\sigma_x - \sigma_y}$$

$$2\theta_p = 90°$$

$$\theta_p = 45°$$

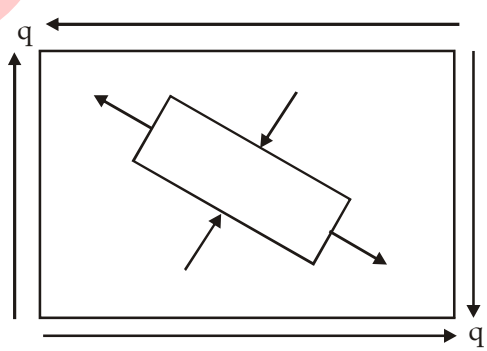

It is the case of pure shear which is called as diagonal shear as the principle stresses in this case are acting at 45° diagonally and development of crack will take place due to the tensile nature of principle stress

ZONE TECH

→ Shear R/F are provided to resist the diagonal tension but concrete must resist the diagonal comp. also hence the SF should not be so high.

Design of shear R/F as per IS 456 :-

(1) Critical Section For Shear :-

Clause 22.6.2 :-

S.F at the face of support shall be considered for design.

Clause No 22.6.2.1 :-

In case the support reaction is create comp. into the end region of member, in such case all section upto distance 'd' from the face of support may be design for same SF, whatever is at 'd' distance.

(2) Nominal Shear Stress :-

As per IS 456 - 2000 average value of shear stress recomended is as follow

$$\tau_v = \frac{V}{Bd}$$

$$\tau_v \not> \tau_{cmax}$$

$$\tau_v > \tau_{cmax} \text{ - redesign}$$

(3) τ_{cmax} **:-** Max permissible shear strength with shear R/F

Grade of Concrete	M_{15}	M_{20}	M_{25}	M_{30}	M_{35}	M_{40}
τ_c **max**	2.5	2.8	3.1	3.5	3.7	4.0

τ_v value should not exceed $\tau_{c\,max.}$ $\tau_v \not> \tau_{c\,max.}$ In such case if area of steel of main R/F and shear R/F is provided as per requirement, but concrete may fails due to principle comp. or diagonal comp.

Hence in order to avoid this failure nominal shear stress is limited to $\tau_{c\,max}$.

Where $\tau_{c\,max}$ corresponds to diagonal comp failure of concrete in comp. zone

(4) τ_c :- (Design shear strength of concrete without shear R/F)

→ τ_c depend upon grade of concrete and % of tensile R/F at support it is read from table no. 19 and 23 of IS code

V_s = Shear force for which shear R/F are to be designed

$= (\tau_v - \tau_c)$ B.d

(1) $\tau_v < \frac{\tau_c}{2}$ → No shear R/F

(2) $\frac{\tau_c}{2} < \tau_v < \tau_c$ – minimum shear R/F

(3) $\tau_c < \tau_v < \tau_c$ max – shear R/F are designed for $(\tau_v - \tau_c)$ Bd

(4) $\tau_v > \tau_{c\,max}$ - redesign.

Design Step :-

Step - I

Calculate design SF

$$V_u = \frac{W_u \ell}{2}$$

Step - II

Calculate nominal shear stress τ_v

$$\tau_v = \frac{V_u}{Bd}$$

$$\tau_v \not> \tau_c \text{ max}$$

$$\tau_v > \tau_c \text{ max Redsign}$$

Step - III

Calculate % of tensile R/F at support

$$P_t = \frac{100\,Ast}{Bd}$$

Step - IV

Calculate design shear strength of concrete from table No 19/23 depending upon grade of concrete and p_t.

Step - V

Calculate shear to be resisted by concrete and main tensile steel.

$$V_c = \tau_c \, Bd$$

Step - VI

Calculate SF to be resisted by shear R/F

$$V_s = V_u - V_c$$
$$= (\tau_v - \tau_c) \, Bd$$

Step VII :-

Design of shear R/F.

There are 3 types of shear R/F which are to be provided in order to resist SF.

(1) Vertical shear R/F :-

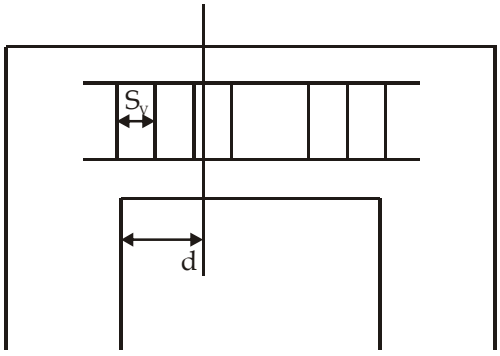

V_s = (Area of shear R/F) × (Strength of shear R/F)

(No of bars) × (Area of one bar) × σ_{sv}

$$V_s = \frac{d}{S_v} \times A_{sv}.\sigma_{sv}$$

$$S_V = \frac{\sigma_{sv}.A_{sv}.d}{V_s}$$

$$= \frac{\sigma_{sv}.A_{sv}.\cancel{d}}{(\tau_v - \tau_c)B\cancel{d}}$$

$$Sv = \frac{\sigma_{sv}.Asv}{(\tau_v - \tau_c)B}$$

$$\sigma_{sv} = .87\ Fy$$

$$Sv \not> \text{min of} \begin{cases} 0.75d \\ 300mm \end{cases}$$

(2) Inclined Shear R/F :-

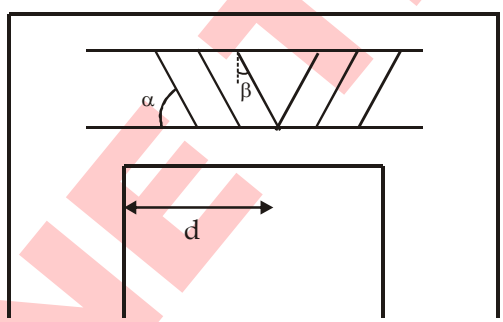

$$Vs = \frac{d}{Sv}(\sin\alpha + \cos\beta)\ Asv\ .\ \sigma_{sv}$$

$$Sv = \frac{\sigma_{sv}Asv.d}{V_s}(\sin\alpha + \cos\beta)$$

$$Sv \not> \text{min of} \begin{cases} d \\ 300mm \end{cases}$$

(3) Bent up bars :-

(1) Bent up bars are the main tensile R/F that are bent at a suitable angle (generally 45°) with horizontal in upward direction.

(2) Bent up bars are always provided along with either vertical or inclined shear R/F

$V_s = \tau$

(3) First location of bent up bars is $\sqrt{2}$ a from the face of column

where a = lever arm

$a = jd$

and subsequent bars are bent at distance $\sqrt{2}\,a$ from the previous location such that it does not span beyond L/4 from the face of support shear to be resisted by bent up bars

$$V_{sb} = \sigma_{sb} A_{sb}. \sin \alpha$$

→ Contribution of bent up bars in resisting the total shear should not exceed by more than 50% of total shear to be resisted by shear R/F

→ Net shear force to be resisted by either vertical or inclined shear R/F is

$$Vsn = \max \text{ of } \begin{cases} \dfrac{V_s}{2} \\ V_s - V_{sb} \end{cases}$$

Note :-

minimum shear R/F to be provided is as per the following local provision

$$\frac{A_{sv}}{BS_v} \geq \frac{.4}{.87fy}$$

ZONE TECH

CHAPTER - 5
(DESIGN FOR BOND)

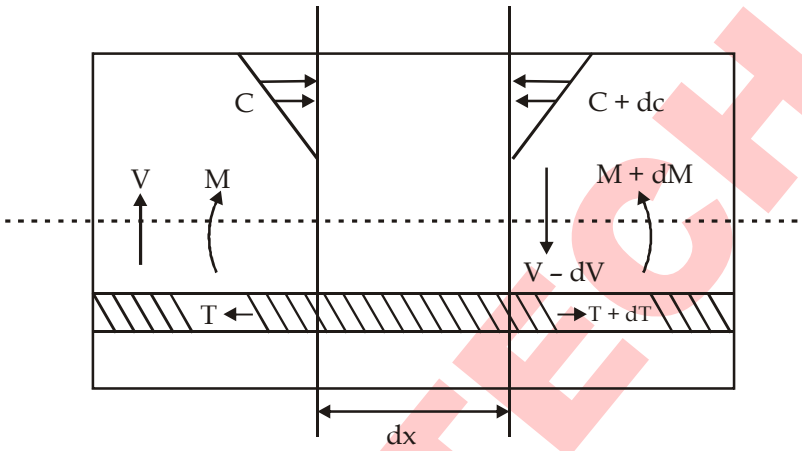

$M = CL_A$ **OR** TL_A ... (1)

$(M + dM) = (c + dc)L_A$ OR $(T + dT)\ L_A$ ... (2)

eq^n (2) – eq^n (1)

$dM = dTL_A$

$$dT = \frac{dM}{L_A} = \frac{dM}{Jd}$$

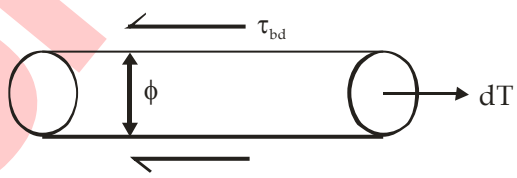

$dT = \tau_{bd}\ (n\pi\phi).\ dx$

$$\frac{dM}{jd} = \tau_{bd}\ (n\pi\phi)\ dx$$

$$\tau_{bd} = \left(\frac{dM}{dx}\right).\left(\frac{1}{n\pi\phi.jd}\right)$$

$$\tau_{bd} = \frac{V}{\Sigma O\, jd}$$

ΣO = Perimeter of all bar

τ_{bd} Permissible :-

ZONE TECH

f_{ck}	τ_{bd} (LSM)	τ_{bd} (WSM)
M_{20}	1.2	0.8
M_{25}	1.4	0.9
M_{30}	1.5	1.0
M_{35}	1.7	1.1
M_{40}	1.9	1.2

Note :-

→ These values only valid for Fe 250 (plain bars) only.

→ For high strength bars there value are increased upto 60%

→ If bars are used in comp further 25% increase in above values

→ τ_{bd} value should not exceed more than $\tau_{bd\ perm}$. If bond stress developed is more than permissible bond stress than we can reduce the size of bar and increase its no keeping the area of R/F to be same such that perimeter available for bond to act is increases.

Development Length :-

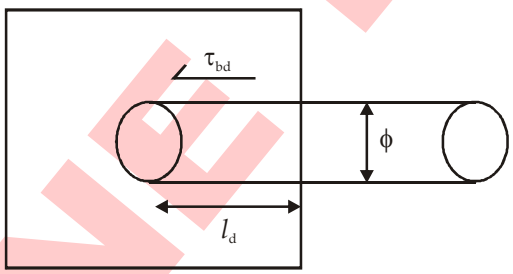

Development length is the minimum length of steel R/F that is to be embedded in the concrete such that strength of R/F equals to the strength of bond between the steel and concrete.

Strength of R/F = strength of bond

$$L_d = \frac{\phi\sigma_{st}}{4\tau_{bd}}$$

σ_{st} = .87 fy (LSM)

Note :-

As per IS 456 - 2000 development criteria at simple support for tensile R/F is satisfied if development length follows the following codal provision

$$L_d \le 1.3\frac{M_1}{V} + L_0$$

M_1 = MOR at support

V = SF at support

L_0 = sum of anchorage beyond the centre of support and length of hook or bend if provided.

(1) If no bends are provided :- If bends are not provided then $L_0 = \frac{W_S}{2} - x'$

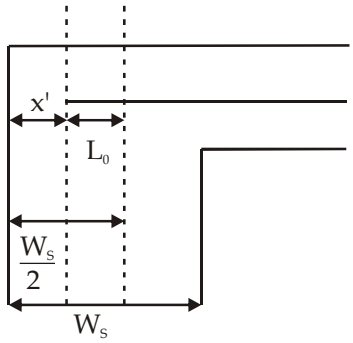

(2) If Bends are Provided :-

For each 45° bend length is increased by 4ϕ (4 times the dia of bar) subjected to max upto 16ϕ.

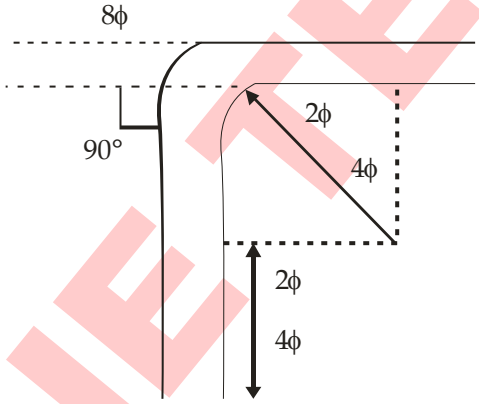

ZONE TECH

CHAPTER - 6
(DESIGN OF SLAB)

Some Important IS Codal Provision :-

(1) Effective Span :-

(A) Simply Supported Beam :-

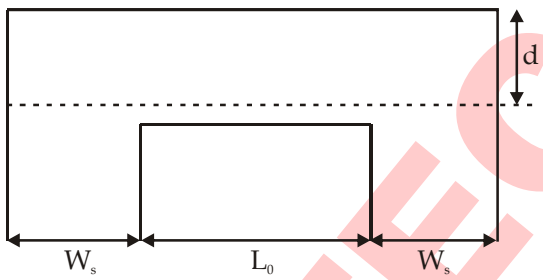

$$\text{Leff - min of } \begin{cases} L_0 + d \\ L_0 + w_s \end{cases}$$

(B) Continuous or Fixed, Beam / Slab :-

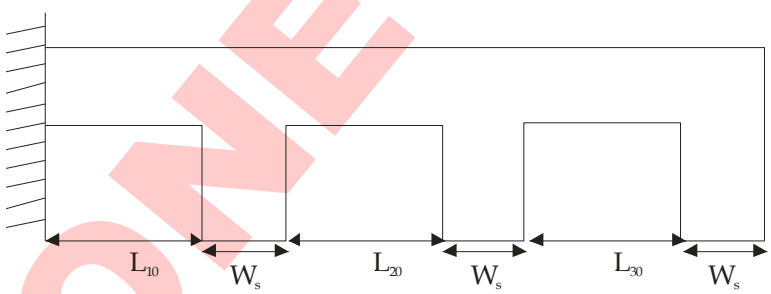

Case - I

$$\text{If } w_s \geq \left[\frac{\text{span}}{12} \text{ or } 600 \text{ mm}\right]_{\text{min.}}$$

(A) For the beam/slab which is either fixed or continuous at both end.

Leff = L_{10}

Or

Leff = L_{20}

Effective span = Clear span

(B) Beam/Slab, S.S at one end and cont. at other end

$$\text{Leff - min of } \begin{cases} L_{30} + \dfrac{d}{2} \\ L_{30} + \dfrac{w_s}{2} \end{cases}$$

Case - II

$$\text{If } W_s \le \frac{\text{span}}{12} \text{ or } 600 \text{ mm}$$

Leff is similar to simply supported beam/slab

(3) Cantilever beam :-

(1)

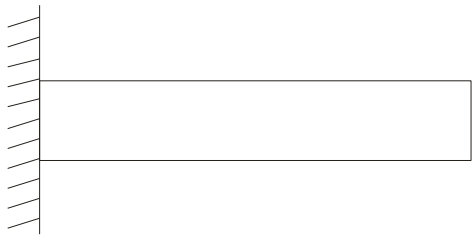

$$\text{Leff} = L_0 + \frac{d}{2}$$

(2)

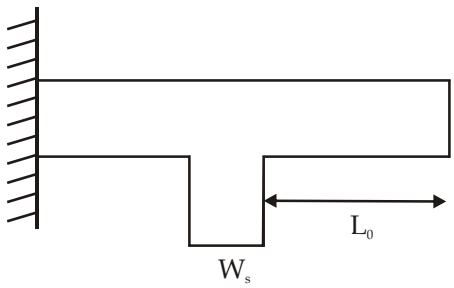

$$\text{Leff} = \text{minimum of } \begin{cases} L_0 + \frac{d}{2} \\ L_0 + \frac{W_s}{2} \end{cases}$$

One Way Slab :-

One way slab is the type of slab which span is only in one direction that it is either supported on two opposite edges or it is supported on all 4 edges having span ratio > 2.

$$\text{Aspect ratio} = \frac{\text{longer span}}{\text{shorter span}} = \frac{Ly}{Lx}$$

(1)

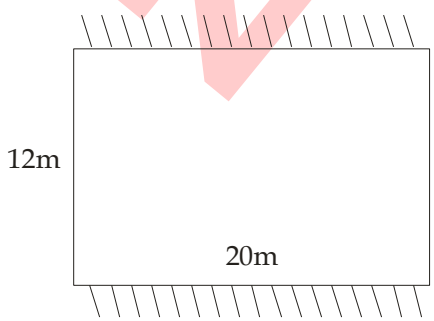

$$\frac{Ly}{Lx} = \frac{20}{12} = 1.67 < 2 \text{ one way}$$

ZONE TECH

(2)

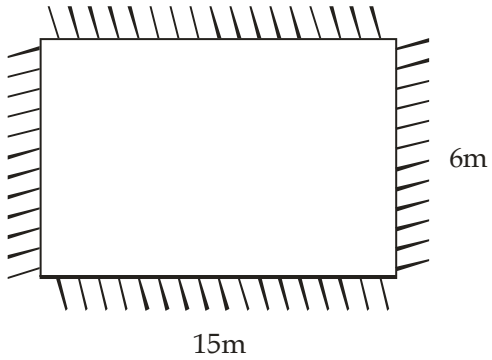

$$\frac{Ly}{Lx} = \frac{15}{6} = 2.5 > 2 \text{ One way slab}$$

One way slab are designed as the beam of 1m width and spaning in shorter direction.

Design procedure of one way slab :-

Step - Design load :-

W_1 = dead load

W_2 = live load

W_3 = floor finish load

$W = W_1 + W_2 + W_3$

$W_u = 1.5W$

$$V_u = \frac{W_u L}{2}$$

$$BMu = \frac{W_u L^2}{8}$$

(2) Depth requirement :-

$BMu = Mu \text{ limit} = QBd^2$

$$d = \sqrt{\frac{BM_u}{QB}}$$

(3) R/F requirement :-

$BM_u = .87\, f_y\, Ast\, (d - .42\, x_u)$

OR

$$Ast = \frac{.5f_{ck}}{f_y}\left[1 - \sqrt{1 - \frac{4.6M_u}{f_{ck}Bd^2}}\right]B.d$$

(4) Check For Shear :-

$$\tau_v = \frac{V_u}{Bd}$$

$$\tau_v < k.\ \tau_{c\,max}$$

(5) Check For Bond :-

$$\tau_{bd} = \frac{V_u}{\Sigma Ojd}$$

$$\tau_{bd} \not> \tau_{bdperm}$$

(6) Check For L_d :-

$$L_d \not> \frac{1.3M_1}{V} + L_0$$

Two Way Slab :-

It is the type of slab which span in both direction i.e. it is supported on all four edges having aspect ratio < 2

Design :- Case - I

When corners are not prevented from lifting/not restrained / held down :-

(i) When corner are hot restrained than no negative moment is develop at support.

(ii) Design of such case is done by rankine grasshoff method.

(iii) In this method, the total load to be acting on slab is assumed to be distributed in both direction that is X & Y direction and R/F are provided in both direction.

Rankine grasshoff :-

$$w = w_x = w_y$$

$$\delta_x = \delta_y$$

$$\frac{5}{384EI} W_x L_{x_{eff}}^4 = \frac{5}{384EI} W_y L_{y_{eff}}^4$$

$$\frac{W_x}{W_y} = \left(\frac{Ly_{eff}}{Lx_{eff}}\right)^4 = r^4$$

$$W_x = r^4.W_y$$

$$W = r^4 W_y + W_y$$

$$= (r^4 + 1)W_y$$

$$W_y = \left(\frac{1}{1+r^4}\right).W$$

$$W_x = \left(\frac{r^4}{1+r^4}\right).W$$

$$M_x = \frac{W_x.L_x{}^2eff}{8}$$

$$M_y = \frac{W_y.L_{yeff}^2}{8}$$

$$V_{ux} = \frac{W_x L_{xeff}}{2}$$

$$V_{uy} = \frac{W_y L_{yeff}}{2}$$

Depth req :-

$$d = \sqrt{\frac{\max of\left(M_x \text{ or } M_y\right)}{QB}}$$

A_{st} req :-

$$A_{st\ x} = \frac{.5f_{ck}}{f_y}\left[1-\sqrt{1-\frac{4.6M_{ux}}{f_{ck}Bd^2}}\right]B.d$$

$$A_{st\ y} = \frac{.5f_{ck}}{f_y}\left[1-\sqrt{1-\frac{4.6M_{uy}}{f_{ck}\ Bd^2}}\right]B.d$$

Case - II

When corners are prevented from lifting / restrained / not held down :-

When corners are restrained than –ve moment generated at support the design of such cases done either by marcus method or by IS code Method.

Marcus Method :-

It is the modification over Rankine's grass hoff method in which BM coefficient are multiplying with respective BM in X & Y direction and design procedure is same.

$$C = \left(1-\frac{5}{6}\frac{r^2}{1+r^4}\right)$$

$$M_x = \frac{CW_x.Lx^2eff}{8}$$

$$= \left(1-\frac{5}{6}-\frac{r^2}{1+r^4}\right)\left(\frac{r^4}{1+r^4}\right)\frac{WL^2_{xeff}}{8}$$

$$M_y = \frac{CW_yL^2_{yeff}}{8}$$

$$= \left(1-\frac{5}{8}\frac{r^2}{1+r^4}\right)\left(\frac{1}{1+r^4}\right)\frac{WL^2_{yeff}}{8}$$

Rest design is same.

CHAPTER - 7
(DESIGN OF COLUMN)

Design of Column :-

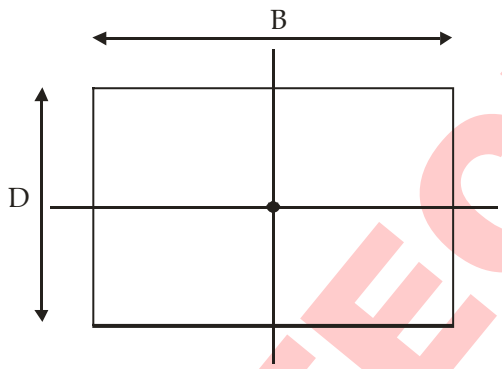

Concentrically loaded column

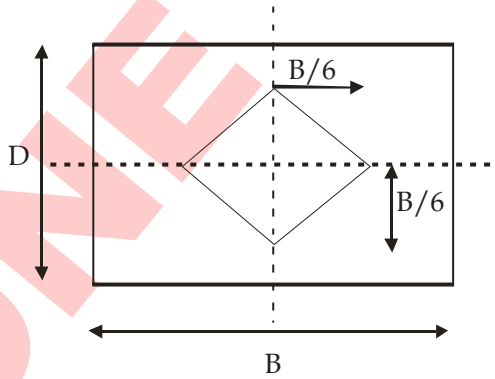

Axially loaded column

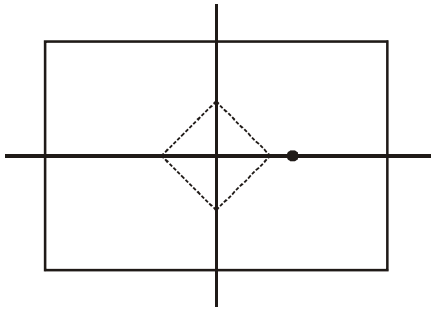

Axially loaded column with eccentricity in one direction

ZONE TECH

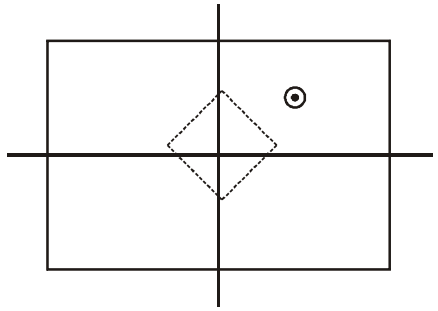

Axially loaded column with eccentricity in both direction

Slenderness ratio :- (λ)

$$\lambda = \frac{\text{Effective length}}{\text{Least lateral dimension}}$$

$$\lambda = \frac{\text{Leff}}{\text{B or D}}$$

$\lambda > 12$ = long column

$\lambda \leq 12$ = short column

$\lambda \leq 3$ = pedestal

Effective length

(1) Both end fixed

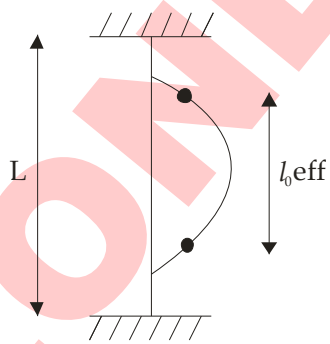

leff = .65L

(2) One end fixed and other end is hinged

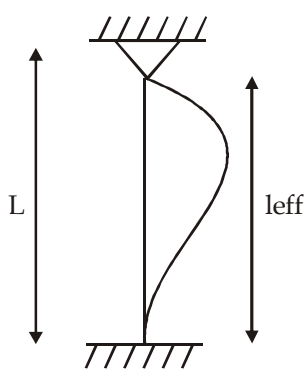

8L = leff

ZONE TECH

(3) Both end hinged

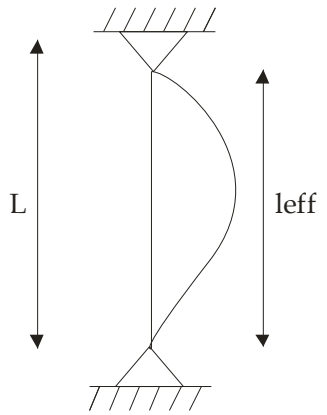

L = Leff

(4) One end fixed and other end is free

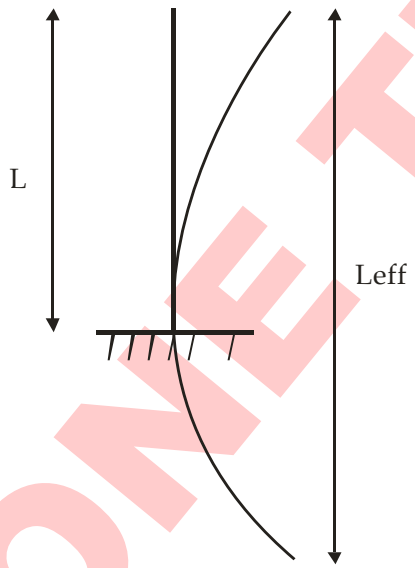

Leff = 2L

(5) One end fixed and other end is supported by guided roller

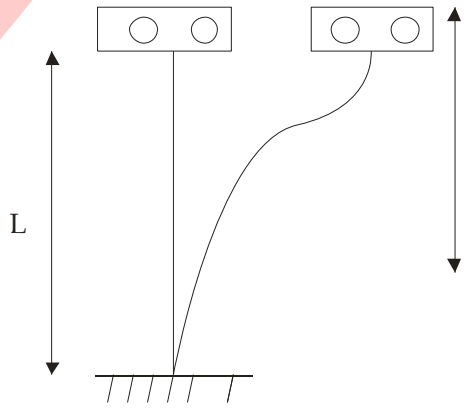

Leff = 1.2 L

ZONE TECH

(6) One end fixed and other end is partially supported by guided roller

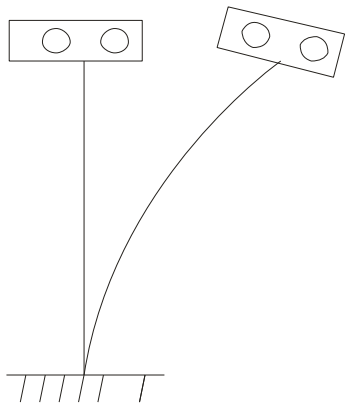

Leff = 1.5 L

(7) One end is hinged and other end is supported by guided roller

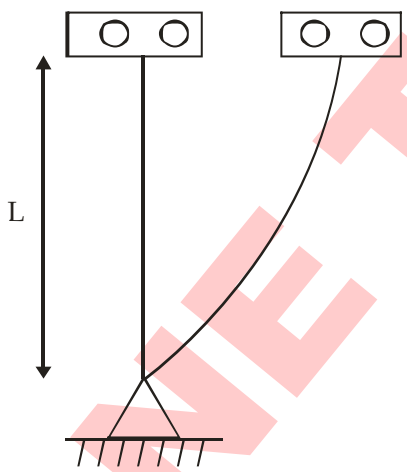

$L_{eff} = 2L$

→ Minimum area of R/F to be provided in column is 0.8% & maximum area of R/F is 4% which can be increased upto 6% if laps are not provided.

→ Minimum no of bar in column is 4 in rectangular column and 6 for circular column

→ Spacing between the main R/F should not be more than 300 mm

→ Minimum dia of bar used in column is 12 mm

→ In order to hold the vertical R/F in same line, transverse R/F are provided

→ The size of transverse R/F is

$$\phi_h = \max \text{ of } \begin{cases} \dfrac{\phi_{main,largest}}{4} \\ \text{or} \\ 6\,mm \end{cases}$$

→ The spacing between transverse R/F should not be more than the following

$$\text{Spacing} \not\geq \text{minimum of} \begin{cases} \text{LLD} \\ 16\phi_{\text{main, smallest}} \\ 300\,\text{mm} \\ 48\phi_h \end{cases}$$

→ In case of circular column helical R/F are provided to hold the main longitudinal R/F in same line

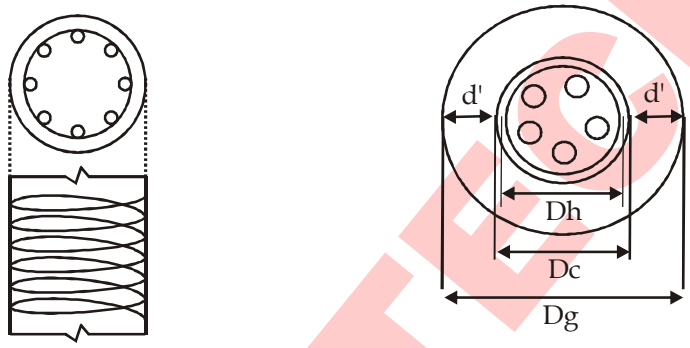

→ In case of helical R/F the load carrying capacity of column is increased by 5% due to the contribution of helical R/F in resisting vertical comp. load in vertical direction

→ This load carrying capacity is increased if pitch helical R/F satisfy the following codal provision.

$$\frac{0.36 f_{ck}}{f_y}\left[\frac{Ag}{Ac} - 1\right] \leq \frac{V_h}{V_c}$$

$$Ag = \frac{\pi}{4} \times D_g^2$$

A_C = Area of core

D_C = dia of core

$$A_C = \frac{\pi}{4} D_C^2 \qquad [D_C = D_g - 2d']$$

$$Vc = A_C \times 1000$$

Vh = vol. of helix in 1m eff length

→ Area of helical R/F × (length of helix in 1m length)

$$= \frac{\pi}{4} \times \phi_h^2 \times (\text{no of} \times \text{length of one turn})$$

$$Vh = \frac{\pi}{4}\phi_h^2 \times \left[\frac{1000}{n} \times \pi Dh\right]$$

$$D_h = D_C - \phi_h$$

$$p \not> \text{minimum of} \begin{cases} 75\,mm \\ \dfrac{Dc}{6} \end{cases}$$

and also

$$p \not< \text{minimum of} \begin{cases} 25\,mm \\ 3\phi_h \end{cases}$$

Assumptions :-

→ All the assumption valid for bending are also valid for comp.

→ In axial compression maximum compressive strain in concrete is 0.002.

→ When column is subjected to combined bending & direct stresses than maximum strain in compression in the highly compressed extreme fiber when there is no tension is equal to

= 0.0035 – .75 (strain in least compressed fibre)

Design :-

(1) Load carrying capacity of concentrically loaded short column

$$Pu = .45\, f_{ck}\, Ac + .75\, f_y\, Asc$$

(2) Load carrying capacity of axially loaded short column.

$$Pu = .4 f_{ck}\, A_C + .67\, f_y\, A_{sc}$$

If column is long :-

$$Pu = Cr\,(.4\, f_{ck}\, A_C + .67\, f_y\, A_{sc})$$

$$Cr = 1.25 - \frac{leff}{48B} = 1.25 \frac{leff}{160\, i_{min}}$$

B = LLD OR dia

i_{min} = min radious of guration

Minimum Eccentricity :-

$$e_{min} = \left[\frac{L}{500} + \frac{B}{30} \text{ or } 20mm\right]_{max}$$

$$e_{xmin} = \left[\frac{L}{500} + \frac{B}{30} \text{ or } 20mm\right]_{max}$$

$$e_{ymin} = \left[\frac{L}{500} + \frac{D}{30} \text{ or } 20mm\right]_{max}$$

Above expression of load carrying capacity is valid if e_{min} is

$$e_{min} \le 0.005 \times \text{Lateral dimension}$$

CHAPTER - 8
(DESIGN OF FOUNDATION)

Desing of Footing :-

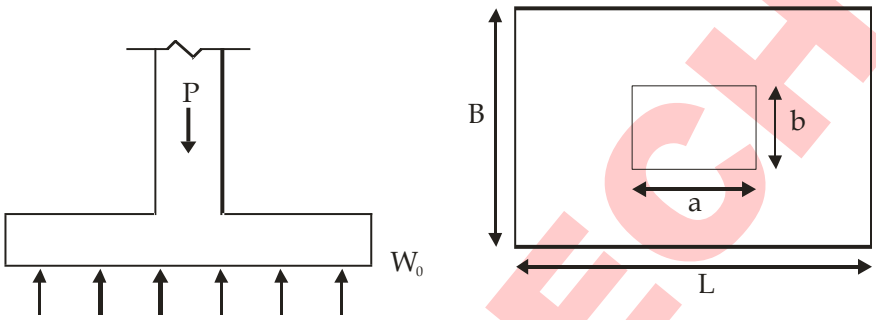

(1) Load Calculation :-

(A) Load transfer by column = P

(B) Self wt of footing = (10 - 20%)P

$$P_T = 1.1P$$

$$A_f = \frac{P_T}{q_0 \rightarrow \text{safe}}$$

$$\frac{L}{B} = \frac{a}{b}$$

→ Net soil pressure active on footing

$$W_0 = \frac{1.5P}{A}$$

(2) Design of Flexure :-

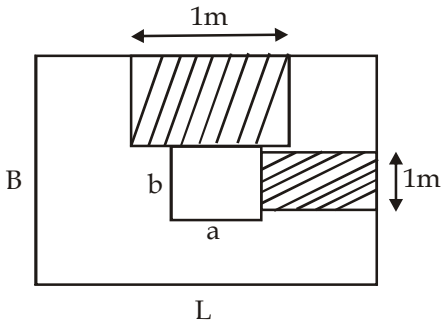

ZONE TECH

$$M_x = \frac{W_u (B-b)^2}{8}$$

$$M_x = \frac{W_u (L-a)^2}{8}$$

$$d = \sqrt{\frac{\max of (M_x \text{ or } M_y)}{QB}}$$

(3) Design for one way shear :-

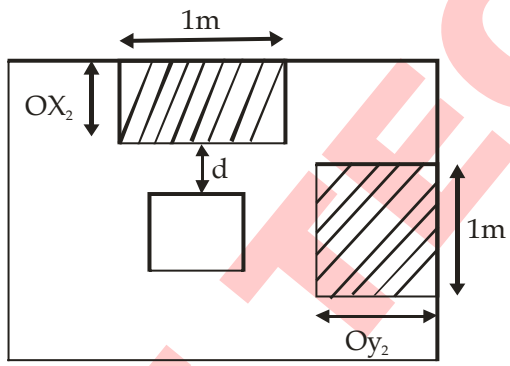

$$Oy_2 = Oy_1 - d = \left(\frac{L-a}{2}\right) - d$$

$$Ox_2 = Ox_1 - d = \left(\frac{B-b}{2}\right) - d$$

$$= W_u\left[\left(\frac{B-b}{2}\right) - d\right]$$

$$Sf_y = W_u (Oy_2)$$

$$W_u\left(\frac{L-a}{2} - d\right)$$

$$\tau_v = \frac{Max of (Sf_x \text{ or } Sf_y)}{Bd}$$

$$\tau_v < K.\tau_c \min$$

$$\tau_c \min = .29 \text{ N/m}^2$$

(4) Design For Two Way or Punching Shear :-

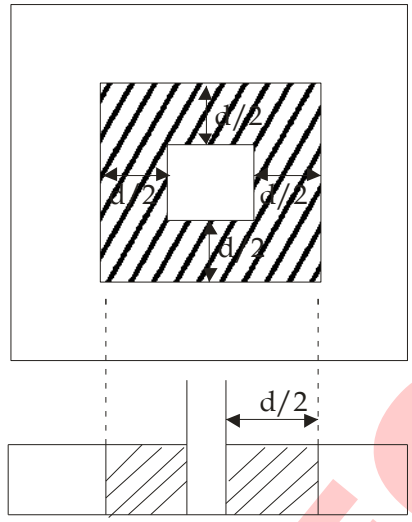

Punching shear stress $(\tau_{VP}) = \dfrac{\text{Punching force}}{\text{Resisting area}}$

Punching shear force = $P_u - W_u (a + d)(b + d)$

Resisting area = $2[(a + d) + (b + d)].d$

$$\tau_{VP} = \frac{P_u - W_u(a+d)(b+d)}{2[(a+d)+(b+d)].d}$$

$$\tau_{VP} < K_S.\tau_{cp}$$

$$K_s = \left(0.5 + \frac{b}{a}\right)$$

$K_s \not> 1$, If $K_s > 1$ than take $K_s = 1$

$$\tau_{cp} = 0.25\sqrt{f_{ck}} \rightarrow \text{LSM}$$

$$\tau_{cp} = 0.16\sqrt{f_{ck}} \rightarrow \text{WSM}$$

(5) Design of R/F =

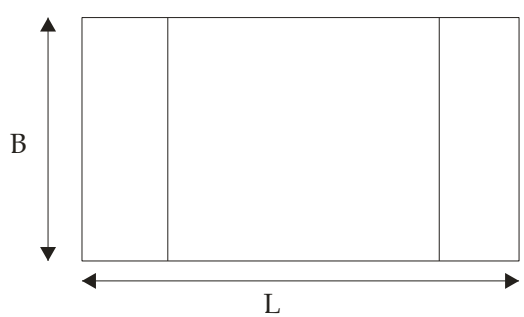

ZONE TECH

$$A_{st\,x} = \frac{.5 f_{ck}}{f_y}\left[1-\sqrt{1-\frac{4.6M_{ux}}{f_{ck}\,Bd^2}}\right].Bd$$

This A_{stx} is for 1m length

For 'L' length total steel required = L × Astx

Provide ϕ dia bars :- Number of bar

$$\eta_T = \frac{A_{stx} \times L}{\frac{\pi}{4} \times \phi^2}$$

No of bars provided in central band of width B

$$\eta = \eta_T\left(\frac{2}{1+\beta}\right)$$

$$\beta = \frac{L}{B}$$

Remaining bars are provided equally in both side of band of $\left(\frac{L-B}{2}\right)$ width

$$Ast\ y = \frac{.5 f_{ck}}{f_y}\left[1-\sqrt{1-\frac{4.6 m_u}{f_{ck} Bd^2}}\right]Bd$$

ZONE TECH

CHAPTER - 9
(DESIGN OF RETAINING WALL)

(i) Self wt of R/W
(ii) Lateral Earth pressure
(iii) Super imposed load
(iv) Any other load :-

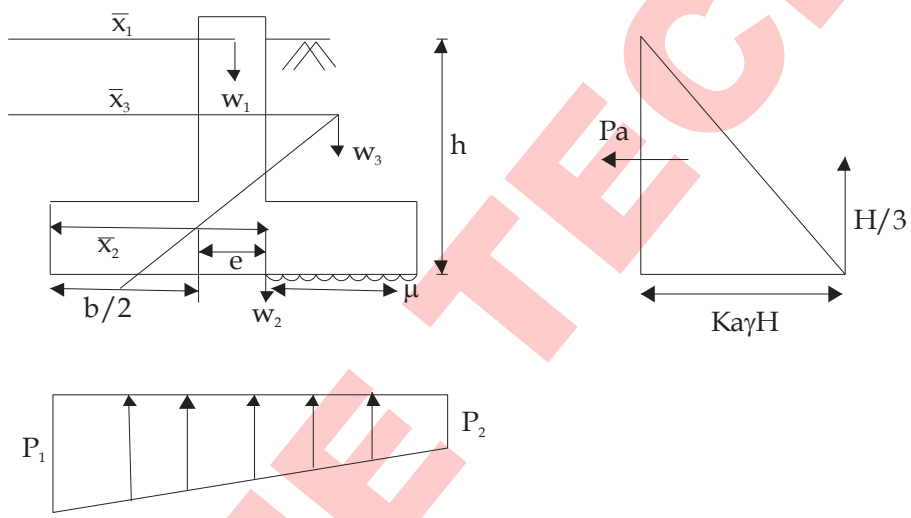

(1) Stability against over turning :-

Overturning moment = $M_0 = P_a \frac{H}{3}$

$= \frac{1}{2} Ka\gamma H^2 \frac{H}{3}$

$= \frac{1}{6} KarH^3$

Resisting Moment :-

$MR = W\bar{X}_1 + W_2\bar{X}_2 + W_3\bar{X}_3$

$= \Sigma WiXi$

$(FOS)_{OT} = \frac{MR}{M_0} = \frac{\Sigma WiXi}{\frac{KarH^3}{6}}$

$(FOS)_{OT} = \not< 2.0 - \text{static load}$

$\not< 1.50 - \text{Earth quake load}$

(2) Stability against sliding :-

Sliding force, $F_s = P_a$

Resisting force, $FR = \mu\Sigma w$

$$(FOS)_s = \frac{F_R}{F_S} = \frac{\mu\Sigma w}{P_a}$$

$$(FOS)_S = \not< 1.5 - \text{static load}$$

$$\not< 1.0 - \text{Earth quake load}$$

$(FOS)_S < 1.5$ – shear key are provided

(3) Tension Failure :-

$$\Sigma M = \Sigma WiXi = P_a.\frac{H}{3}$$

CG of resultant, $\bar{X} = \frac{\Sigma M}{\Sigma W}$

Eccentricity = $e = \frac{b}{2} - \bar{X}$

Net pressure at bottom of R/F

$$P_{1,2} = \frac{\Sigma W}{b}\left(1 + \frac{6e}{b}\right)$$

$$P_1 = \frac{\Sigma W}{b}\left(1 + \frac{6e}{b}\right)$$

$$P_2 = \frac{\Sigma W}{b}\left(1 - \frac{6e}{b}\right)$$

P_1 should be < safe bearing capacity

P_2 should not be tensile

For no tension $e \le \frac{b}{6}$

(4) Bending Failure :-

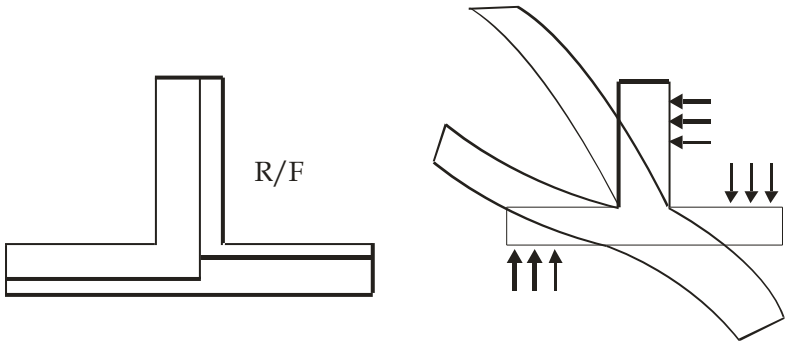

General Guidlines :-

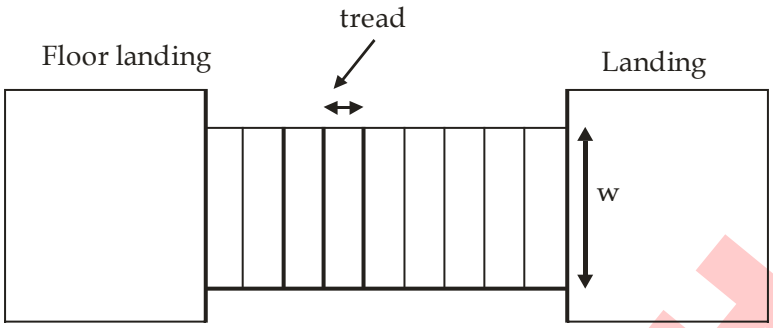

w = width

(1)

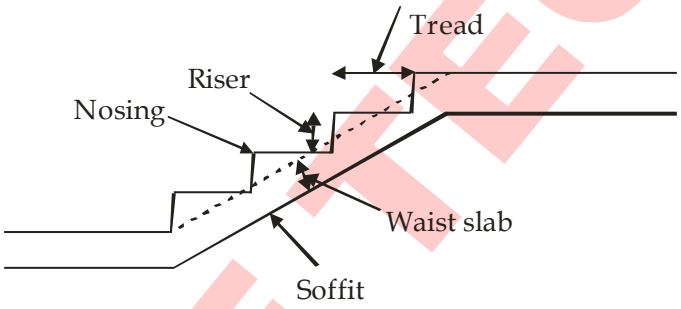

Waist slab type stair case

(2)

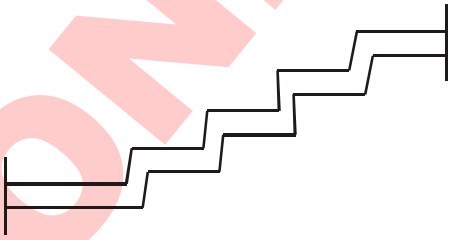

Tread riser type
strail case

(3)

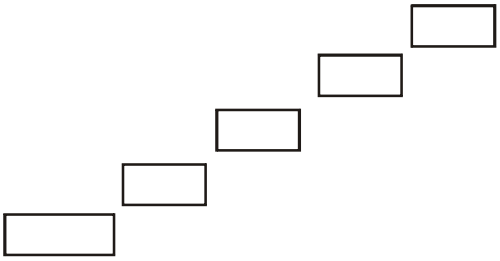

independent stread slab type
strair case (santilever strair case)

ZONE TECH

→ Width of stair case - 1m - 2m public buildings

→ Tread - T = 250 - 300mm - Residential building

T = 250 - 300mm - public building

→ Riser :-

R - 150 - 100mm - Residential building (160 mm)

R - 120 - 150mm - Public (150 mm)

R - 190 mm - Factories

550 < (2R + T) < 700

minimum no of steps - 3

maximum no of steps - 12

Types of stair case :-

(1)

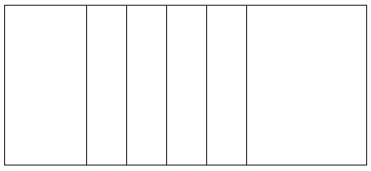

Straight stairs

(2)

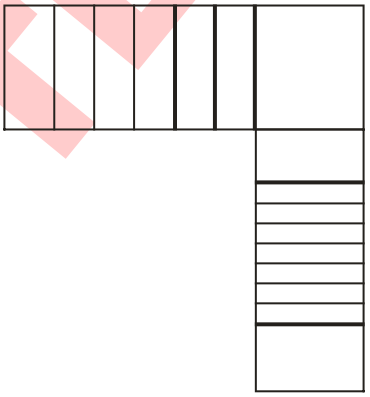

Quater turn stairs

(3)

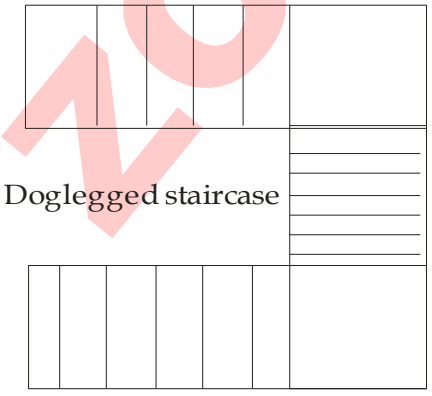

Doglegged staircase

(4)

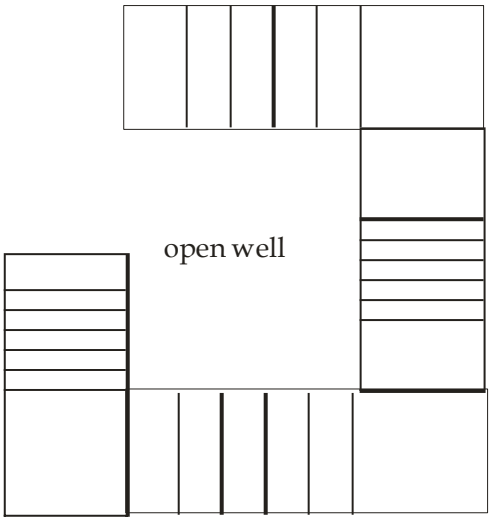

open well

ZONE TECH

(5)`

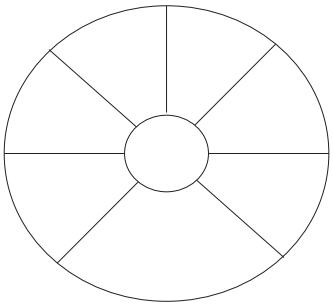

Spiral stairs

(6)

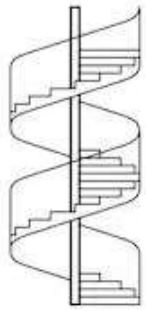

Helical strair case

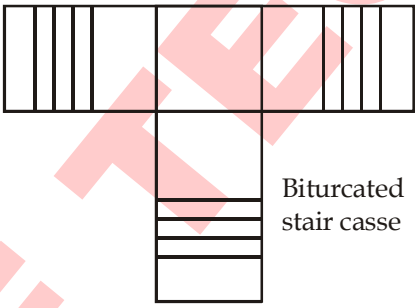

Biturcated stair casse

Effective Span Of stairs (C1 - 33%)

Case - I

Supported on tap & bottom riser by beam spanning in direction of riser.

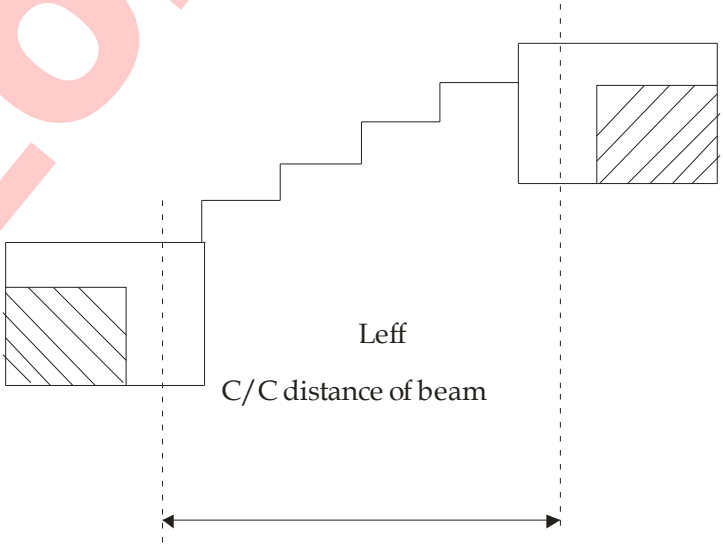

ZONE TECH

Case - II

Landing is supported on wall and waist slab is supported on landing

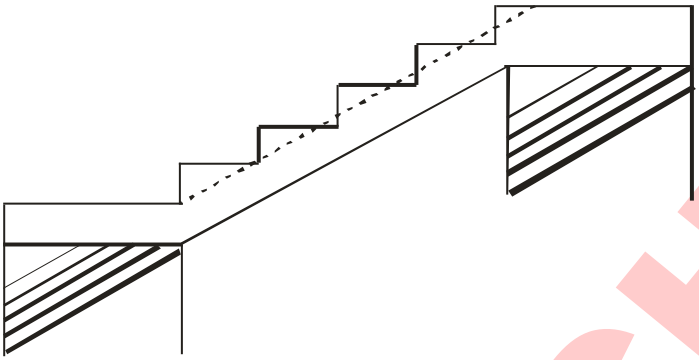

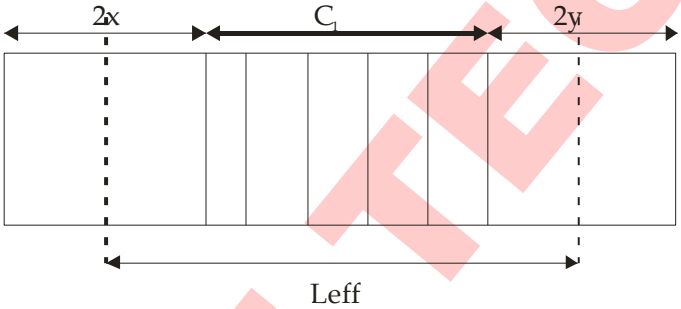

$Leff = C_1 + X + Y$

X	Y	leff
x < 1	y < 1	leff = G + X + y
x > 1	y < 1	leff = a + 1 + y
x < 1	y > 1	leff = G + X + 1
x > 1	y > 1	leff = G + 1 + 1

Case - III

Supported on beam and Landing is spanning in same direction as that of slab.

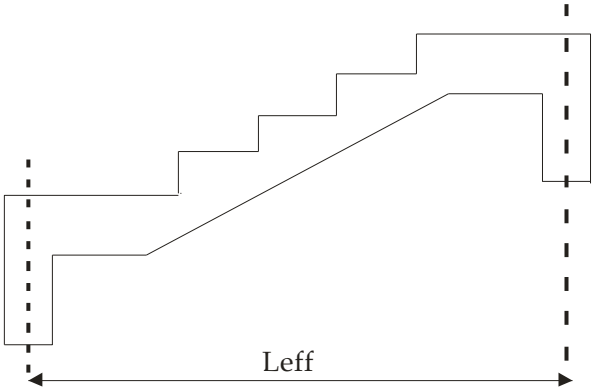

ZONE TECH

(A) Live Load :- As per IS : 875 : 1987 (Part II) recommendation the live load on waist slab as well as on landing is as follows

$$W_{LL} = \begin{cases} 5.0\,kN/m^2 \neg \text{Ingeneral} \\ 2.0\,kN/m^2 \text{ - over crowding is unlikely} \end{cases}$$

Note :-

In case of structurally independent cantilever step, the loading code required that the tread slab should be capable of resisting a concentrated load of 1.3 kN acting at the free end of the tread slab.

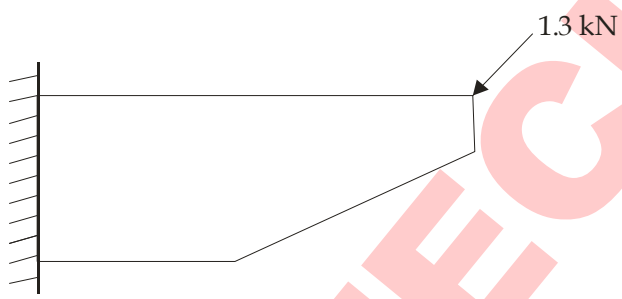

(B) Dead Load

(1) Self wt of waist slab (W_1)

(2) Self wt of steps (W_2)

(3) FFL (W_3)

$$W_1 = \frac{(R^2 + T^2) \times t \times B \times 25}{T}$$

$$W_2 = \frac{\frac{1}{2} \times R \times \cancel{T} \times B \times 25}{\cancel{T}}$$

$$W_2 = \frac{1}{2} \times R \times B \times 25$$

W_3 = FFL (usually .5 - 10 kN/m²)

Design of vertical RCC wall :-

→ minimum thick of RCC wall = 100 mm

→ If wall is load bearing or shear wall

thickness $\left(150\text{mm OR } \frac{H}{25} \text{ or } \frac{L}{25}\right)\text{min}$

→ Clause 32.2.3 - slendrerness limit

$$\frac{\text{Effective height}}{\text{Thickness}} \not> 30$$

→ **Clause 32.24 Effective height**

(A) When wall is restrained against rotation at both end :-

(i) Floor = .75 Hw

(ii) Interesecting wall = .75L

(B) Not restrained

(1) Floor = 1.0 Hw

(2) Intersecting wall = 1.0 L

Hw = unsupported height of wall

L = Distance between intersecting wall

Clause 32.5 – minimum R/F

	Grade	Vertical R/F	Horizontal R/F
(i)	Fe 250	.15% at Ag	.25% of Ag
(ii)	High strength $Fe \geq 415.\phi \leq 16mm$	.12% at Ag	.20% of Ag
(iii)	Welded wire	.12$% at fly	.20% of Ag

Spacing $\not< $ wind $\begin{cases} 3 \times \text{thcknes of wall} \\ 450\,mm \end{cases}$

Note :-

For walls having thickness more than 200mm, horizontal & vertical R/F must be provided in two grid one near each face of wall.

Water tank

Classification :-

Base on location	Base on shaps
(1) Water tank resting on ground	- Rectangular
(2) Under ground wT	- Square
(3) Elevated wT resting an stagging	- Circular
	- Intz

Code Used :-

1. IS 3370 (Part I) : 2009 - general reqm
2. IS 3370 (Part II) : 2009 - RCC
3. IS 3370 (Part III) 2009 - PSC
4. Part IV : 1967 - design table for pending shear tension

Permissible Stress of Concrete :-

Grade of concrete	In tension dirct rension σct	Bendly tens σbt	In comp direct comp σcc	bend comp σcbc	Bond
M25	1.30 (1.15)	1.80	6	8.5	.3
M30	1.50 (1.36)	2.0	8	10	1.0
M35	1.60 (1.45)	2.20	9	11.5	1.1
M40	1.80 (1.60)	2.40	10	13	1.2

Permissible stress in steel :-

for mild steel - 115 N/m2

for high tensile steel 130 N/m2

Note :-

(1) The crack width criteria is satisfied if stresses in steel are within permissible range.

(2) The width of crack is 0.2mm on outer face & it should be zero for inner face.

Same IS 3370 Codal Provision :-

1. The minimum R/F in wall, Floor & roof is on both face is 0.64% for mild steel ad 0.35% for high strength steel

→ The minimum R/F can be reduced upto 0.4% for mild steel & 0.24% for high strength steel if dimension of tank are less than 15m.

Min R/F - Fe 250 - (64% or 40%) of surface zone

Fe 415/500 - (35% or .24%) at surface zone

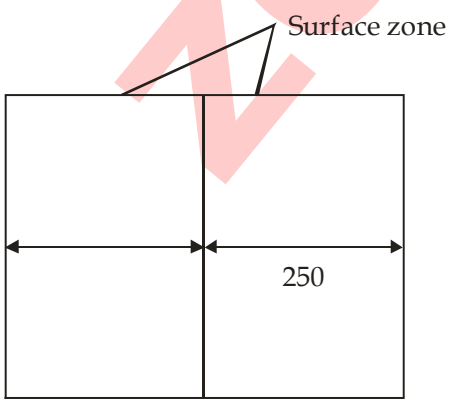

t ≤ 500

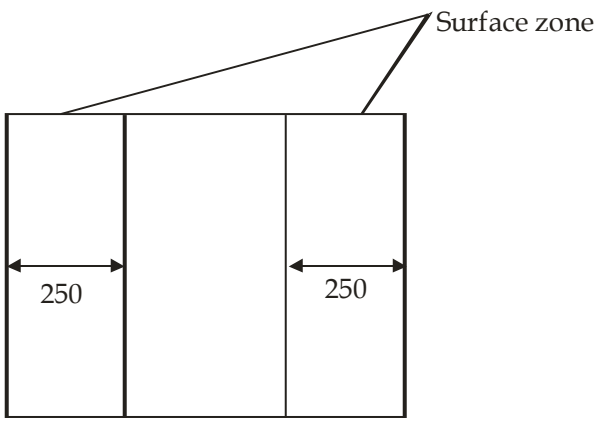

t > 500

ZONE TECH

→ For walls having thickness less than 200 mm, R/F are placed on one face

→ For slab having thickness less than 300 mm R/F are provided on one face near upper surface by providing necessary cover.

→ Generally smaller size of bars are used.

→ Spacing of R/F should not be greater tan min of thickness of member

Specific $\not> \begin{cases} \text{Thick} \\ 300\,\text{mm} \end{cases}$

→ The concrete used should have low workablity to ensure durability , resistance to leaching, less chemical attack, less erosion etc

→ Lesser value of water cement ratio is used. maximum w/c ratio is 0.45

→ Maximum cement content is 400 kg/m3 to take core of shrinkage effects

→ Minimum cement content is 320 kg/m3

→ Minimum grade of concrete is as follow

PCC - M20 RCC - M30 PSC - M40

→ To reduce cracking due to temp. shrinkage & moisture loss at early stage of concrete, during should be done atleast 415 days

→ By providing nominal R/F in the member, cracks can be controlled. Cracks can also be controlled by slow filling of tank (1m in 24 hours) for 1st time or by the use of plastisizer admixture.

→ Any structure retaining liquid and having free space above liquid are should be taken in sever exposure condition.

ZONE TECH